Security Automation Systems, Inc.
8739 Castle Park Drive
Indianapolis, IN 46256
Phone/Fax: 317-489-9621
Toll Free: 877-SAS-FORYOU
www.securityautomationsystems.com

Attention: **Ken White**
Grundy County Jail
Phone:
Fax:
Email: **KWhite@sheriff1.com**

Date: **4/15/16**
PROPOSAL #: **16074**

Grundy County Sheriff's Office Jail Control System Request for Proposal

We have included a bid in response to the "Grundy County Sheriff's Office Jail Control System Request for Proposal". This includes addendum #1 and addendum #2. We attended the mandatory walk-through on 4-13-16.

Details of Work

I. Door Control System

All of the existing Allen-Bradley PLC equipment will be removed and disposed of. This proposal includes new industrial-grade Omron PLC equipment consisting of a new PLC processor, PLC processor power supply, communication modules, input modules and output modules. The PLC processor will include a non-volatile memory card to store the control program. In the event the processor loses power, the program will always be loaded from this memory card. We will provide sufficient quantities of PLC equipment to provide a fully-functional system. We will re-use the existing door control relays, terminal blocks and fuses. The existing utility control relays will be re-used. We will connect to the existing building power/UPS.

II. Legacy Backup Door Actuators

As an alternate to troubleshooting and repairing the backup toggle switch door actuators, we will provide one spare PLC processor, memory module and PLC processor power supply.

III. Door Control Addition for Section "K" and Section "A" Doors

We will add two electric locks for your two existing mechanical-only doors E103 and E120. For the new electric locks, we propose an Airteq #9500 retro fit tube lock full height with a 24volt motor lock so we can run the conduit over and into the top of the tube (see attached sketch). We would reuse the existing doors, door frames and DPSs. We would remove the mechanical locks and clean up the existing locks by welding the covers and bondo, grind and add metal to close the existing strikes on the doors and frames. The new tube locks would be installed with an offset handle and locking lug into the frame mounted tube system by Airteq. All items would be left in primed only condition. These locks would have their own builders-type high security key by Medeco X4 type. These locks can be keyed alike to each other or differently from each other. However, they cannot be keyed the same as any other doors in the facility. We will include a total of 6 keys. Others can be provided at additional cost. New cable and raceway would need to be installed between the new electric locks and the equipment room on the 2nd floor. We have included all required cable and raceway necessary for this. Cable will be run open above accessible ceiling. Where cable is run in inmate-assessable areas, it shall be run in EMT conduit. We will be using Crowder Detention as our subcontractor for the lock installation.

IV. Touchscreen Control System

We will remove and dispose of your existing touchscreen control stations. We will provide two new touchscreen control stations for Central Control. Each station will consist of a PC, 22" LCD widescreen touch monitor and speakers. Each PC will be loaded with Windows 10 professional. These stations will be configured as "redundant" stations. They will share a single talk-path between them. We will provide one new Harding Instruments Touchscreen Master Module. We will also provide one fully-configured spare PC. This PC would remain in storage at your facility until required. The

software we will provide will be our CCS (Correctional Control Software), utilizing Wonderware Indusoft software. This software will be configured and programmed specifically for your facility.

The control stations at Central Control will include the same functionality that your existing touchscreen stations currently provide. Additionally, the touchscreen control stations will include the following features;

- Ability to log onto/off the touchscreen control station
- Ability to set preferences on the station (types of sounds, etc.)
- Manual and automatic camera call-up through the on-screen video display (utilizing the exacq interface)
- Ability to statically display cameras and ability to play back recorded video (utilizing the exacq interface)

Prior to system installation, we will invite your staff to our facility in Indianapolis to review the operation of all software systems. At this meeting, you will be able to provide input on system changes.

V. Data-logging System

We will provide and install a new data-logging system for the security electronics control/monitoring system. This system will consist of a tower-style server, 22" LCD monitor and B/W laserjet printer. This server will be connected directly to the PLC/control system network. The system will record every security transaction (door openings and closings, control station operator actions, intercom connections, etc.). This system will provide you with detailed reports (which can be printed) on system operations. This system will be located in the security equipment room in the Jail. The system will retain logging records for a minimum of 365 days.

VI. Intercom and Paging System

We will demo and turn over to you the existing Dukane audio communications system head-end equipment. We will provide and install a new Harding Instruments DXL digital intercom system head-end. The new head-end requires no PLC input and output modules. The system only requires a digital (Ethernet) interface between the head-end and the new PLC system. The new intercom head-end will be connected to your existing intercom stations and paging speakers. The new system can be digitally adjusted (audio characteristics) via software (unlike your current system). We will provide one audio talk-path between Central Control and the new system. In Central Control, we will provide a new Harding Instruments "Touch Screen Master Module", which consists of a speaker, push-to-talk button and flush-mount microphone. We will include 1 audio encoding device for the touchscreen stations at Central Control. This device will record the active audio conversations between the connected touchscreen station and intercom stations. The audio will be recorded in a MP3 format to the data-logging server. Each active "conversation" will have an associated audio file, which will be accessible to play back via the data-logging server. The data-logger will also include an export function to export the audio file to a folder on the server. For the purposes of this quote, we are assuming maximum recording rate of 80kbits/sec. We will provide hard drive capacity to store up to a minimum of 30 days of audio recordings.

VII. CCTV/Video Surveillance System (Base Bid)

We will remove and dispose of the existing analog video matrix switching system. We will remove any unnecessary coaxial patch cables and ensure that the video cables terminate directly to the existing Axis encoders. We will re-terminate the existing PTZ camera data cables from the old matrix switch to your new Axis encoders for PTZ control. We are assuming that your older PTZ cameras will not be compatible with the Axis encoders due to the older firmware in the cameras. It may be necessary to replace the older PTZ cameras with new in order for them to function through the new system. In Central Control we will remove and turn over to you the existing analog CCTV monitors and CCTV keyboard. All analog CCTV monitors and CCTV keyboards currently connected to the matrix switch will no longer function after the removal of the switch.

We will utilize the existing server (which runs your Milestone VMS) to integrate with the new Jail Control System. On this new system, we will provide and install new exacqVision Professional software and provide associated camera and video system licenses for 80 video channels. We will utilize the existing storage capacity of the server to store video. We will configure the recording system to your existing Milestone System recording parameters in order to achieve the goal of 180 days.

There are no fees associated with installing the exacqVision Professional software on multiple devices (PCs, tablets, mobile devices, etc.). We will provide technical support to the IT department to assist them in installing the exacq software. Your IT department would be responsible for providing any necessary video client PCs and monitors to run the exacqVision software, including any equipment needed in Central Control.

VIII. Milestone Server Retention (Option #1)

For this option we will leave the existing Milestone server and VMS in place and provide a secondary VMS to integrate with the Jail Control System. The system will be sized for 80 video channels and for 30 days of storage, utilizing similar recording parameters as the existing Milestone VMS. We are proposing a solution utilizing exacq Technologies A-series IP camera servers. The new servers will be located in the Jail Control Closet. Each server will include two NICs. One will be connected to the Jail control system and the other NIC will be able to be connected to your LAN.

IX. Video Arraignment System (Option #2)

We have chosen to not bid this option. We feel that there was not enough information provided on the type of equipment and features required. There are many types and quality levels of arraignment systems available. Dending on features required, this can result in a huge cost range difference. It's our experience that in order to price an effective solution, significant input from the judges and prosecutors is required in determining the features/mounting/equipment needed. We would be happy to price a system if we are the successful bidder, but at this time we feel additional information is required.

Electrical Work

This proposal includes all required demolition of unnecessary security electronics equipment. All required installation and terminations of equipment have been included.

Project Delivery and Owner Responsibilities

This project will have separate phases including design, procurement, software programming, equipment testing, Owner software review, installation, on-site testing and Owner training. The vast majority of the time spent on the project will be engineering the control system, which will occur at our office.

As the facility operator, you will have some additional responsibilities during the course of the system turn-over. Additional staff may be necessary during this retrofit. During system change-over, the use of keys will be necessary. Also during the change-over of the system, your intercom stations will not function so your jail staff will require the use of radios for communication. We acknowledge the request to transition the old system to the new within 72 hours and we will attempt to meet this timeline.

We will require a secure area where we can store tools, equipment, etc. for the project. You will be responsible for the disposal of all unnecessary security electronics equipment. Time must be made available for our testing at the end of the project. During testing, we will test the functionality of the touchscreen control computers by opening and closing each door, test the two-way audio communications from the control room to each of the 120 intercom stations, test video call-up, playback and static viewing on the control computer, test door overrides and test utility control functions.

At the project completion, we will provide a complete set of "as-built" documents. This will include drawings, device schedules and operations manuals. We will provide training that will include the proper use of the touchscreen control systems, video management system, intercom/paging system and data logging system.

We acknowledge that this project shall be completed no later than November 1st, 2016.

Additional Considerations

We will pay prevailing wage rates to our hourly (non-exempt) on-site laborers for this project. We will provide certified payroll for those hourly laborers working on-site. We will provide insurance coverage as specified in the bid documents.

Exclusions

1. Dumpsters
2. Disposal of unnecessary equipment
3. Painting
4. Repair of weld smoke damage to surrounding areas
5. Replacement or repair of existing non-functional field devices
6. Replacement of existing wiring
7. Replacement/repair of existing millwork
8. Replacement PTZ cameras
9. Provision of video client PCs and monitors in Central Control
10. Sales tax

Base Bid work: **$116,000.00**
Option #1 (Milestone Server Retention): ADD **$8,000.00**
Option #2 (Video Arraignment System): NO BID

Security Automation Systems (SAS) guarantees its engineering and hardware to be free from defects for a period of one year. Warranty coverage does not include the repair of damage caused by the following; 1) use of the system/equipment other than for which it was designed; 2) acts of God beyond the control of SAS; 3) vandalism, neglect or misuse of the equipment; 4) failure of Owner to provide continuous environmental conditions for which installed equipment is rated; 5) repair or alterations of the system/equipment by others than SAS. Any existing devices that will remain after this project is completed (field devices such as locks, speakers, etc.) are not covered by our new system warranty.

Terms are Net 30 days. SAS works under the terms of a purchase order or a SAS Sales Agreement. No applicable taxes or bonding has been included in our price. Customer shall be required to provide sales tax exemption certificate upon receipt of order. Shipping and handling is included. We will proceed with the work included in this proposal once we receive a Purchase Order *or* signed sales agreement. The price is valid for 60 days. If you have any questions, please feel free to call.

Ryan Tomlinson
E-mail: rtomlinson@securityautomationsystems.com
Phone: 317-489-9621 x801

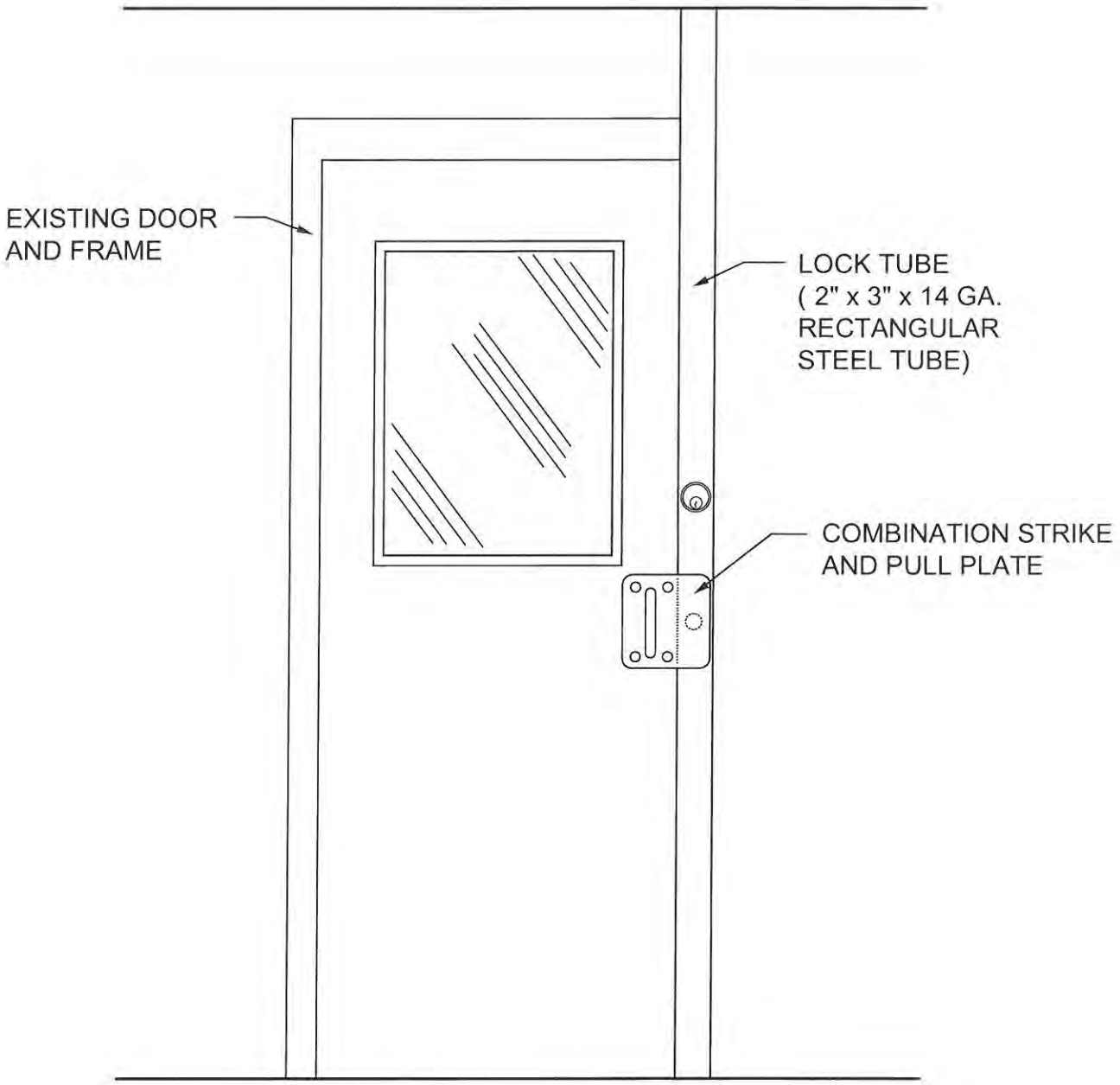

ELEVATION VIEW

9500 SERIES RETROFIT

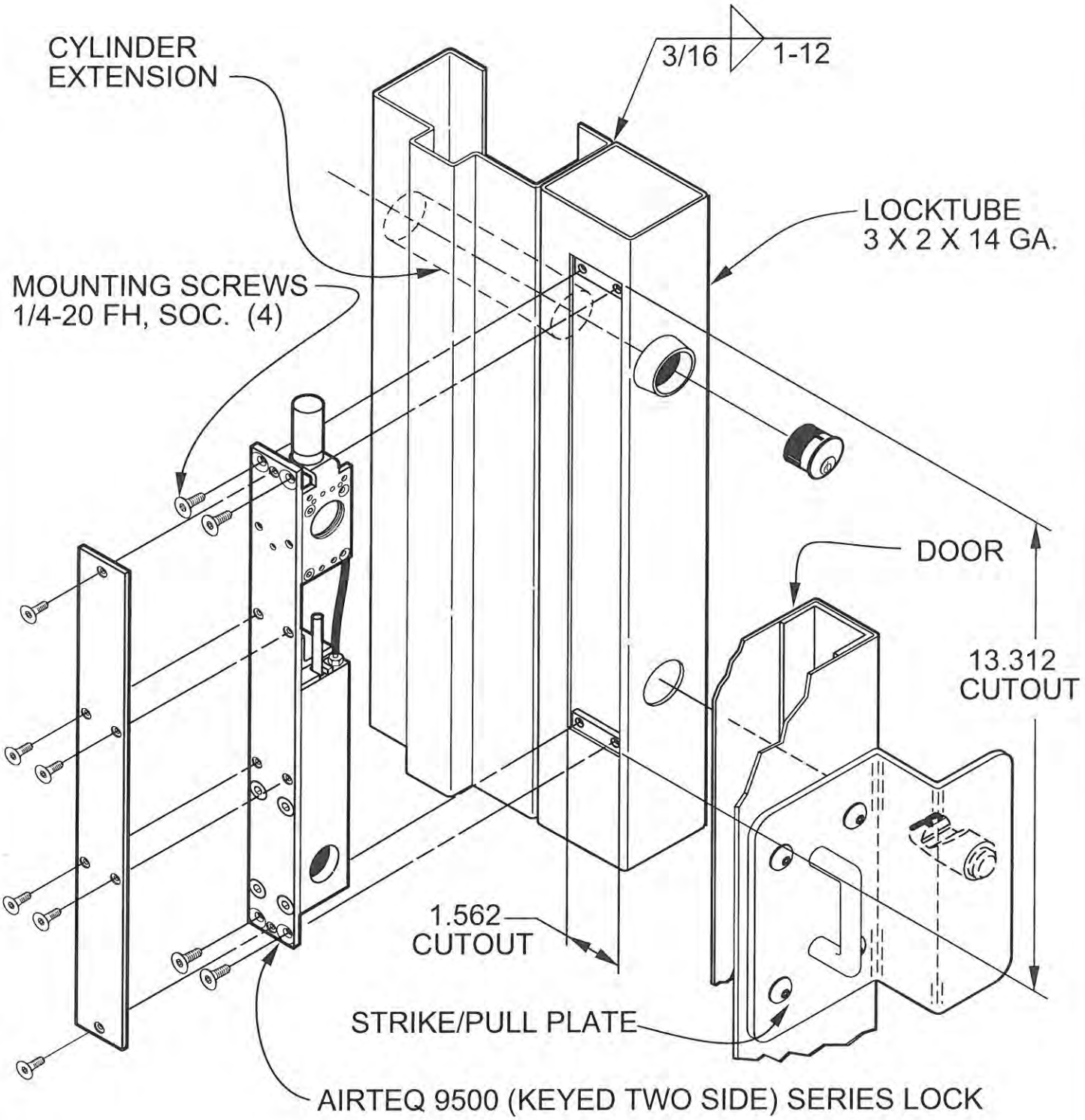

9500 SERIES RETROFIT

F:(Manuals..)\Service Manual\9000 Series Locks\9500\9500retk2s.eps

Programmable Controllers
SYSMAC

OMRON
AUTOMATION & SAFETY

CJ2 FAMILY

PLCs with a proven track record

» Flexibility in communication

» Faster machine development

» Innovation through evolution

Innovation without growing pains

As a modern machine manufacturer you need to continuously increase the intelligence and flexibility of your product to remain competitive. But you also need to be absolutely certain that it all works perfectly, first time, every time.

The CJ2 is the result of years of experience as a market leader in the field of modular controllers and represents a logical next step in controller design. It offers greater performance and faster I/O response as well as extreme scalability - so you will only need one family. In addition, programming, debugging and networking are faster and easier. Welcome to the new CJ2 Family: built to give you innovation without growing pains.

The CJ2 can directly replace any previous generation CJ1 CPU with the following additional significant advantages:

Open to the world - High speed EtherNet/IP
Many CJ2 models offer a built-in multifunction EtherNet/IP port for high speed data exchange between PACs, PLCs, HMIs and I/O devices. In addition to the hundreds of third party suppliers, the CJ2 easily connects to Rockwell's ControlLogix, CompactLogix and MicroLogix controllers. EtherNet/IP is the most requested industrial Ethernet network in North America and it gives users powerful connectivity without the expense of adding extra hardware.

Advanced motion control
CJ2 units offer multi-axes synchronous control, and can replace expensive motion controllers.

Tag programming
Models with built-in EtherNet/IP use a common tag database between the controller and HMI that can reduce development time, allowing your products to get to market faster.

Scalable architecture
The CJ2 platform allows you to pick and choose the CPU & I/O based on your needs. This gives the user a common platform whether the machine has 16 I/O or 5000 I/O making stocking hardware simple and cost effective and reducing the training necessary

because the set up is the same throughout the CJ2 family.

One software

CX-One incorporates all the tools to program, monitor & troubleshoot your entire machine. This will save valuable time in installation, training, update and maintenance of individual software packages.

Simplicity

Reduce setup time as modules easily connect & lock together allowing the user to simply attach power, plug in a standard USB programming cable and begin programming. The CJ2 is about 1/2 to 1/3 the size of many other PACs & PLCs in the market allowing smaller panel sizes which saves money and produces a smaller footprint. Omron supports a single connection to monitor and program all devices located locally or networked. Remote troubleshooting over a modem or Internet can save thousands of dollars on travel & expenses and increase machine uptime.

The wide range of CPUs means you need only to get familiar with one PLC family for use in everything from simple stand-alone applications up to networked, high-speed machines.

Inspired by proven technology

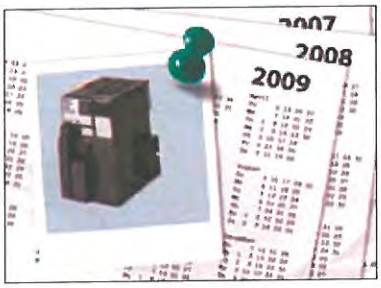

Proved track record

The CJ2 Family is based on the highly popular CJ1, which after its launch in 2001 is operating in an extraordinary variety of applications all over the world. Now, as the natural successor, the CJ2 combines that field-proven technology with a wider choice of CPUs, more speed and memory, and a wider variety of communication interfaces.

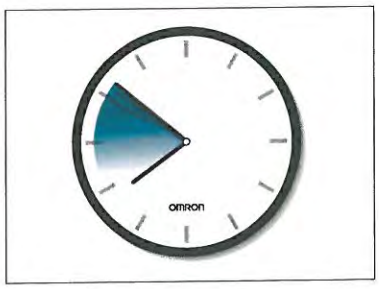

Faster development

Tag-based communications technology will simplify the interfacing of the PLC to the outside world. On-line debugging improvements also help to accelerate software development so you can change the code and test the results quickly. The added function block memory will allow you improve to program structure and reuse of code even in the entry-level models.

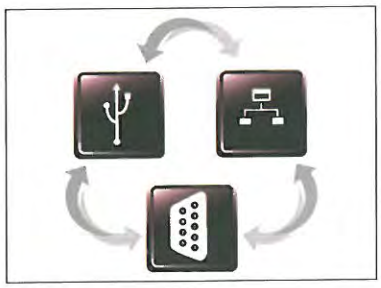

Talks to all

The CJ2 Family supports major open networking technologies including:

- Ethernet-based communication based on open industrial standards
- Serial communications over RS-232 C, RS-422, RS-485 and USB
- The major open Fieldbus standards
- Fast and accurate motion control networks.

EtherNet/IP DeviceNet EtherCAT MODBUS MECHATROLINK-II

Built to answer your needs

Omron has used its experience as a specialist machine automation supplier to develop the CJ2. The result is an extremely reliable controller that is also a powerful example of our commitment to continuous improvement. The CJ2 Family is a major opportunity to innovate and simultaneously reduce cost now and in the future.
It's the obvious choice for modern machine builders.

Power supply Pulse I/O CPUs

Wide range CPU capacity

To stay ahead in the machine-building business, you need to grow with your end-user's needs. Faster production, better quality control and better traceability require more speed and more memory. That's why the CJ2 Family offers a wide range of CPUs- to suit any task. From 5 Ksteps program capacity and 64 Kwords memory, right up to 500 Ksteps capacity and 832 Kwords.

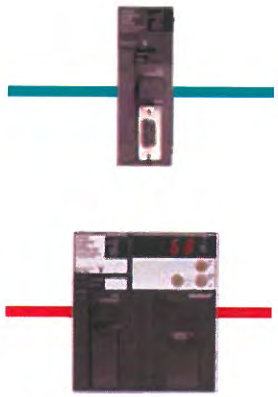

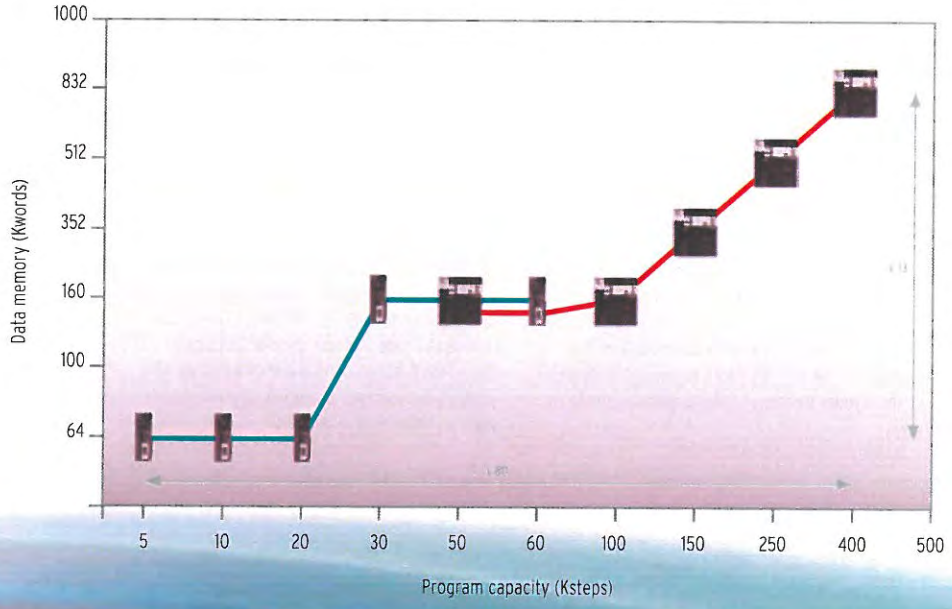

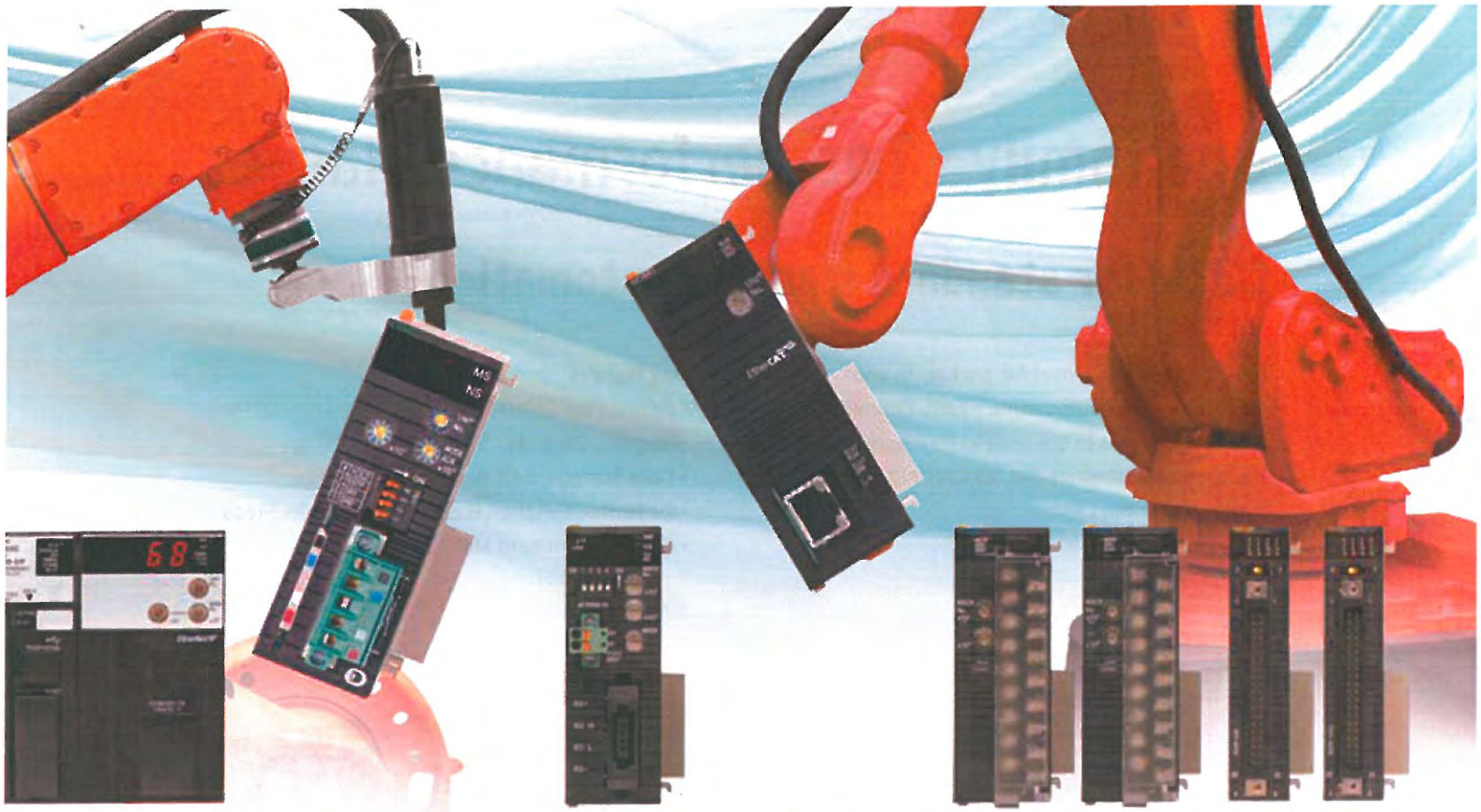

Communication Motion Analog I/O Digital I/O

Higher precision

In addition to the greater CPU processing performance, Omron has also added new high-speed I/O units, such as analog input units with 20 µs conversion time, while new PLC instructions provide immediate access to fast I/O data. The result is even more real-time reliability.

Select what you need

With CJ2 you can also still connect to the existing CJ1 I/O units. You can benefit from CJ2's improvements without redesigning the entire system.

Easy connection by USB

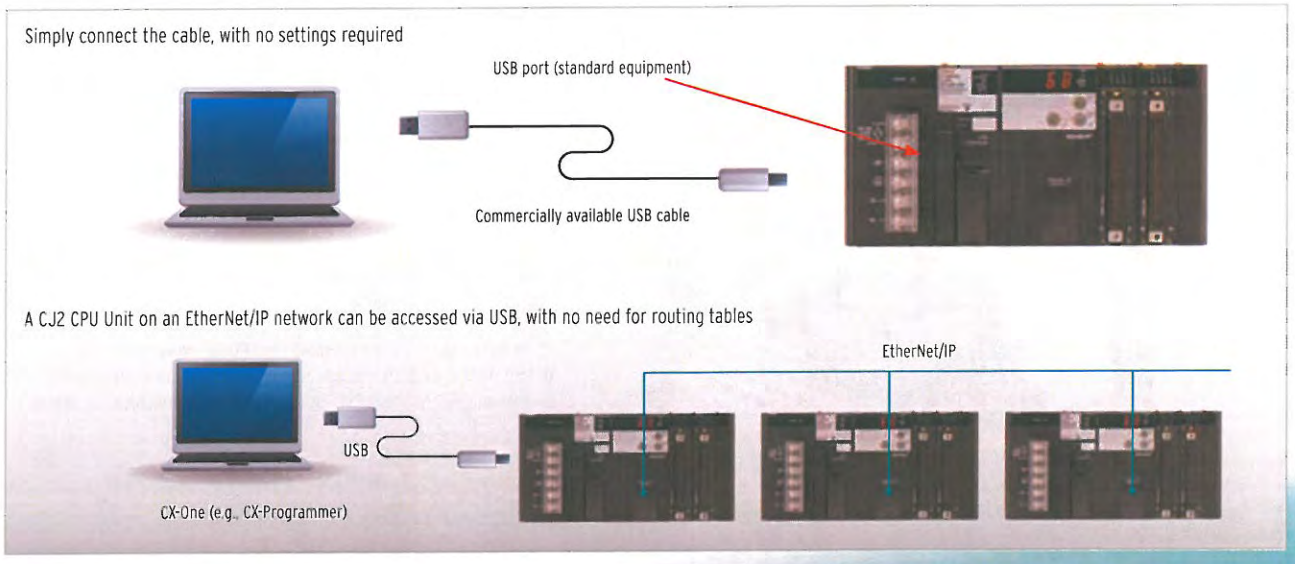

One family - Two performance classes

CJ2M for standard machine automation

The CJ2M Series is ideal for packaging and general machine automation needs. Connectivity is assured thanks to the built-in USB port and the choice of Ethernet and RS-232C/422/485 interfaces on the CPU.

Key Features

- Easy & Fast Connection: USB Programming Port
- Program Capacity : 5K Steps - 60K Steps
- Data Storage: 64K Words - 160K Words
- Dedicated Function Block Memory - 20K Steps
- Symbol, Comment Memory - 1MB

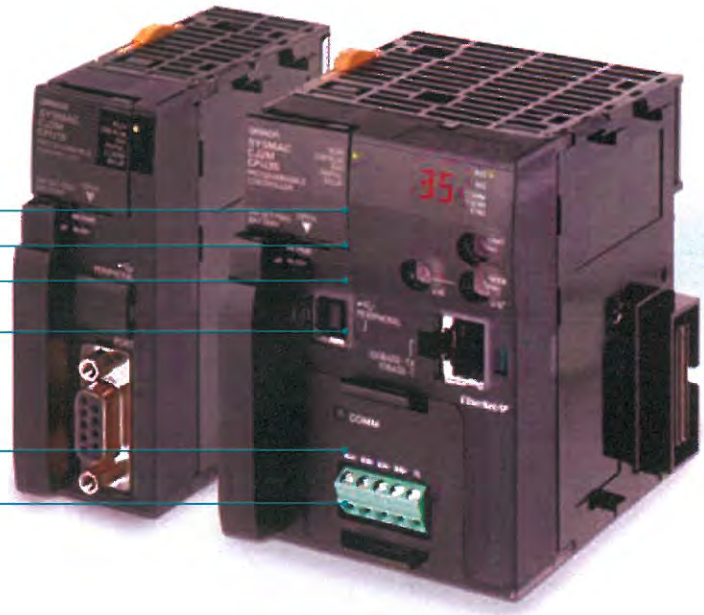

Pulse I/O modules

By mounting optional pulse I/O modules, you can extend the functionality of any CJ2M CPU with:

- interrupt inputs
- quick-response inputs
- high-speed counters
- incremental encoder inputs
- pulse frequency control outputs
- pulse width control outputs

Up to two modules can be mounted per CPU, allowing direct control of four motion axes. Using dedicated instructions, these axes can be controlled directly by the PLC program, without communication delays.

* Supported by the CJ2M CPU Unit with version 2.0 or higher.

CJ2H for ultra high speed capacity

The CJ2H Series is ideal for advanced machine automation needs such as those required in image processing inspection of electrical components and high speed sorting on conveyors.

Key Features

- Easy & Fast Connection: USB Programming Port
- Program Capacity : 50K Steps - 400K Steps
- Data Storage: 160K Words - 832K Words
- Symbol, Comment Memory - 3.5MB

Advanced motion control - made simple

The CJ2H's advanced motion control avoids the use of expensive motion controllers. Synchronized control is possible on up to 20 axes by using just five Position Control units (High-speed type). And, programming is easy - simply paste an electronic cam function block into a synchronized interrupt task.

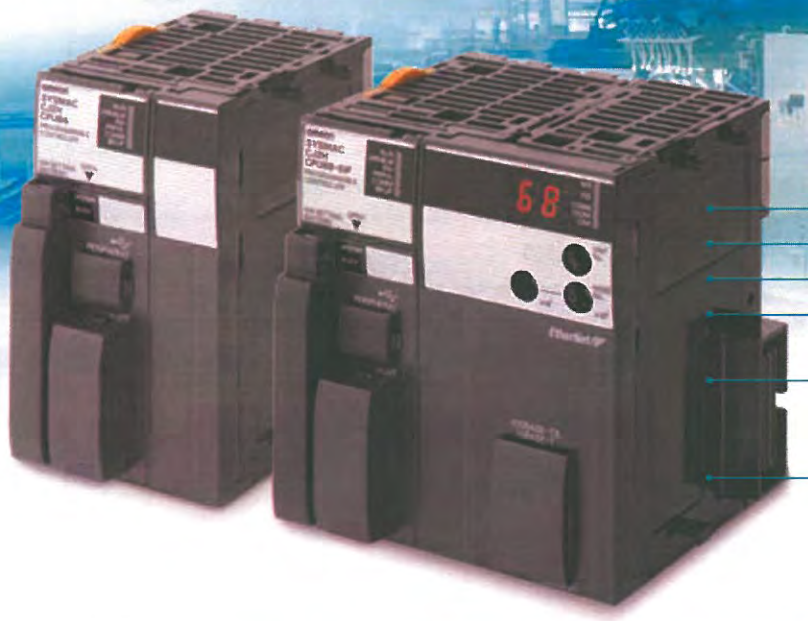

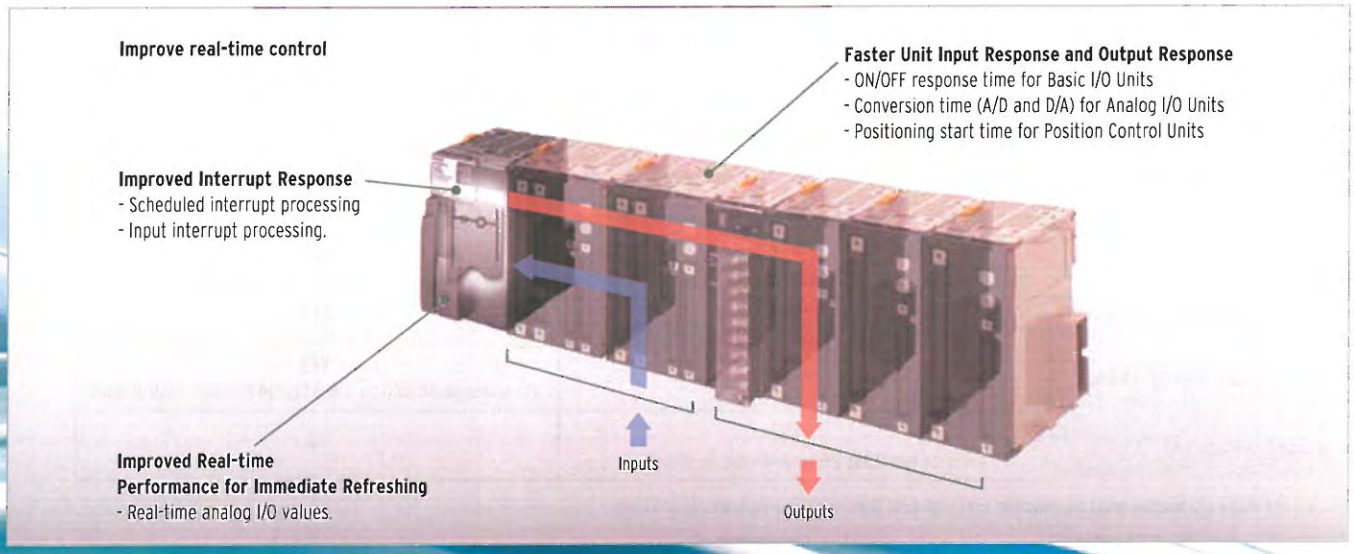

The CJ2 Provides a Complete Lineup

The complete lineup provides high-performance features from machine control to information processing.

Units	CJ2M		CJ2H	
Type	Simple Types	Standard Types	High - end Types	Flagship Types
Models	CJ2M-CPU1□	CJ2M-CPU3□	CJ2H-CPU6□	CJ2H-CPU6□-EIP
Appearance				
Dimensions (W x H x D mm)	31 x 65 x 80	62 x 65 x 80	49 x 65 x 80	90 x 65 x 80
Program Capacity	Up to 60 Ksteps		Up to 400 Ksteps	
Data Memory Capacity	Up to 160 Kwords		Up to 832 Kwords	
I/O Bits	2,560			
Basic Instructions(LD)	40ns		16ns	
Special instruction (MOV)	120ns		48ns	
Floating-point decimal instructions (SIN)	0.86μs		0.59μs	
System overhead time	160μs	270μs	100μs	200μs
FB Program Area	YES (Equivalent to 20K steps.)		—	
Communications Port: USB Port	YES			
Communications Port: Option Port	YES (RS-232C)	One Option Board Modbus TCP Slave (RS-232C or RS-422A/485)	YES (RS-232C)	
Communications Port: EtherNet/IP Port	—	YES	—	YES
Serial PLC Links	YES	YES (A Serial Option Board is required)	—	
High-speed Interrupt Function	—		YES	
Synchronous Unit Operation	—		YES (In combination with a CJ1W-NC□□4 Position Control Unit)	
Pulse I/O Modules*	YES (Up to two Pulse I/O Modules can be mounted)		—	

*A Pulse I/O Module must be mounted for CJ2M CPU Units with unit version 2.0 or higher.

Wonderware InduSoft Web Studio® 8.0

SCADA/HMI Software for Intuitive Dashboards, OEE, and the Internet of Things.

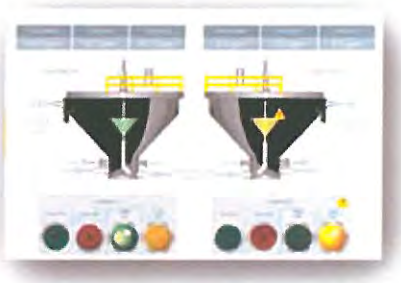

NEW in InduSoft Web Studio® 8.0:

- **Support for Multiple Document Interface on Studio Mobile Access**
  Access your graphical interface from any device, with groups of screens, popups, and dialogs
- **OPC Redundancy**
  Native redundancy for OPC UA and OPC XML/DA interfaces
- **Built-in Tag Integration with PLCs**
  Comprehensive tag integration with PLCs from Schneider and other manufacturers
- **IoTView - Platform agnostic runtime interface**
  Core runtime available for Linux and other platforms
- **Collaboration Server**
  Unparalleled built-in revision control and Application Lifecycle management fully integrated with Microsoft Team Foundation Server
- **Library of Symbols**
  Expanded and improved set of symbols for HMI/SCADA applications

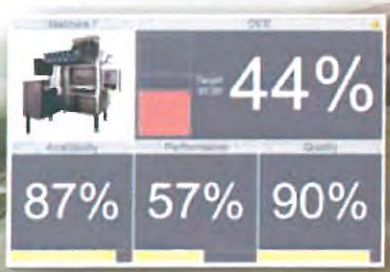

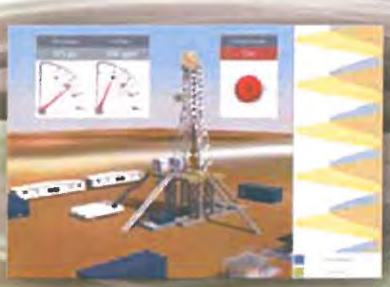

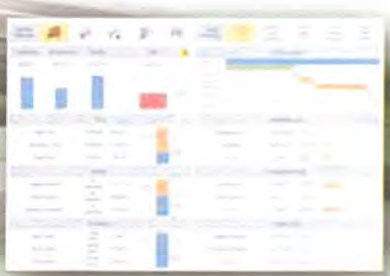

InduSoft Web Studio® Features:

Alarms: InduSoft Web Studio, 8.0 sends online alarms or reports using multi-media formats like PDF. Alarms are real-time and historical; log data in binary format or to any database. Use remote notification to have alarms sent right to your inbox, printer, or smartphone! Custom Alarm fields allow you to customize up to 10 additional fields to the history of alarms.

Animation: InduSoft Web Studio gives you great command over graphics in a user friendly and intuitive interface. Paste images, and even rotate dynamically using custom rotation points. Fill bar graphs with color, or adjust the scale of objects with easy-to-use configuration. Other animations include 'command' (for touch, keyboard and mouse interaction), hyperlink, text data link, color, resize, transparency, and position.

Business Intelligence: Transform raw data into meaningful information. Design custom dashboards in minutes with the InduSoft Web Studio Business Intelligence Dashboard Template.*

Collaboration: InduSoft Collaborative Solution and ALM (Application Lifecycle Management): Compare any configuration file or merge changes from multiple developers. The collaborative solution offers support for versioning and source control, and interaction through Microsoft's Team Foundation Server*, allowing Application Lifecycle Management on location or on the cloud.+

CEView: Complete supervisory control, process monitoring and operator interface software for use with the Windows CE and Mobile operating system platform. InduSoft Web Studio CEView has a small footprint specifically designed for Windows CE operating systems. Windows CE is now known as Windows Embedded Compact.

Database: Connect to any SQL database (Microsoft SQL, MySQL, Sybase, Oracle), or Microsoft Access or Excel, and ERP/MES systems (including SAP), even from Windows Embedded Compact Edition. InduSoft Web Studio is flexible, offering a built in interface that doesn't require knowledge of SQL (for trends, alarms/events, grid and other objects). InduSoft has a patented solution that allows for communication with SQL and relational databases running on any supported platform.

Drivers: InduSoft Web Studio 8.0 provides over 250 native communication drivers for PLCs, temperature controllers, motion controllers, bar code/2D/RFID readers, and many other devices. Use these built in drivers, or connect to an OPC server. InduSoft driver toolkits even allow you the flexibility to build your own drivers.

Email: Send email or text messages that can be accessed from mobile devices. Get real-time information on alarms, process values, and other events. InduSoft Web Studio supports SSL encryption.

EmbeddedView: EmbeddedView offers a small footprint, comprehensive SCADA and HMI software specifically designed for Microsoft Windows Embedded platforms.

Events: InduSoft Web Studio offers traceability for operator initiated actions or internal system activities. Log events such as security system changes (user logon or off), screen open/ close, recipe/report operations, system warnings, and any tag value changes, including custom messages.

FDA Traceability: Take advantage of built-in functionality to create 21 CFR part 11 compliant projects with traceability and e-signatures. These features are often used for pharmaceutical and food applications, but can be used for any application where traceability is a requirement.

FTP: Automatically upload or download files during runtime to/from remote storage locations using the FTP protocol and flexible scripting functions. Configure FTP via scripting or the included interface.

Graphics and Design Tools: Create screens to meet any application requirement using the tools in our graphic interface. Combine over 1,000 animated objects to create any functionality required. Store graphics in the library for future use, and easily make projects across a product line share a consistent "look and feel".

**Additional licenses required.*

+Additional Microsoft Team Foundation Server licenses required.

Historian: InduSoft has optimized the trend history, featuring data decimation designed to load millions of values from SQL Relational Databases. Easy to use tools provide quick access to Statistical Process Control (SPC) values without any need for programming. InduSoft Web Studio offers add-on integration with the Wonderware Historian and support for Wonderware Online.*

IoTView: IoTView is a platform agnostic core runtime for Linux, VxWorks, and other embedded platforms. Make intelligent embedded systems and add your machines to the Internet of Things.

Import Wizards: InduSoft Web Studio Import Wizards allow you to convert whole applications from PanelMate™, or PanelBuilder™32 from Rockwell Automation. It's possible to save considerable time in conversion from a previously designed application to an InduSoft Web Studio application.*

Intellectual Property Protection: Screens, documents, scripts and worksheets can be individually password protected. This prevents unauthorized viewing or editing of your project or application. Protect your intellectual property with just a few mouse clicks.

Multi-Language: Develop your application in one of many development languages, including English, Portuguese, German, French, Russian, Chinese Traditional and Simplified, and Spanish, or use translation tools to switch the runtime to any language. InduSoft Web Studio offers automatic font replacement based on the language selected.

Multi-touch Interface: Develop applications for devices that feature touch screens. InduSoft Web Studio's multi-touch interface allows development for any touch-screen enabled device. Use familiar, modern interface gestures, like pinch zooming and panning. Scroll through alarms using swiping gestures; inertia in the multi-touch interface offers a comfortable user experience. Rotate graphics, dock screens, and take advantage of features like dual-touch command.

.NET and ActiveX: Use 3rd party controls to enhance your project. InduSoft Web Studio is a container for ActiveX and .NET controls, allowing you to add functionality such as browsers, media players, charting, live streaming from cameras, and other ActiveX or .NET controls.

OPC: InduSoft Web Studio provides native OPC interfaces, such as OPC DA (Server/Client), OPC HDA(Server), UA (Client) and OPC .NET 3.0 (Client). InduSoft Web Studio also supports OPC XML. OPC DA and UA connectivity are also available in Windows CE operating systems.

PDF Export: Send Alarms, Reports, or any file to a production supervisor, quality manager, or maintenance staff using the included PDF writer.

Recipes: Save time and maintain consistency by automating part parameters or production quantities with flexible recipe management tools.

Redundancy: For critical applications where data is vital, InduSoft Web Studio supports web server, database and overall system redundancy to protect your information.

Reports: Create clear, concise reports in plain text, RTF, XML, PDF, HTML, and CSV or integrate with Microsoft Office programs such as Excel. Get the data you need, in the format you need it, to make informed decisions, fast. InduSoft has also partnered with Ocean Data Systems to offer further reporting capabilities through Dream Report for InduSoft Web Studio*.

Scalable: Use the same development environment to design and deploy projects to a wide range of platforms, such as Linux, VxWorks, WindowsEmbedded, Windows 7, Windows 8, and Server 2012 editions.

Scheduler: Schedule application behavior triggered by tag changes, date/time, frequency, or any trigger. Use this for simulation, to trigger reports or other functionality at a particular time of day, or even to trigger driver worksheets to read/write at a scan rate you choose.

Scripting: Two powerful scripting languages are supported; built-in InduSoft functions and standard VBScript. Take advantage of widely available resources for VBScript. Both the native InduSoft scripting language and VBScript can be used simultaneously to give you the functionality you need, even from thin clients. Script debugging tools for the native VBScript editor include break-points, and a variable watch list to improve scripting productivity.

Security: InduSoft Web Studio includes support for group and user accounts, e-signatures, and traceability. Integrate your project to the Active Directory (Users and Groups).

Standards: Take advantage of common industry standards to develop applications that are compatible with any format. TCP/ IP, .NET, ActiveX, OPC (client and server), ADO/ODBC, COM/DCOM, OLE, DDE, XML, SOAP, and HTML5 are supported.

**Additional licenses required.*

+Additional Microsoft Team Foundation Server licenses required.

Wonderware InduSoft Web Studio® 8.0

Studio Mobile Access: Studio Mobile Access, InduSoft Web Studio's HTML5 compatible thin client, now offers a multiple document interface that allows you to access your graphical interface from any device with a browser that supports HTML5, such as iPads, iPhones, Android devices, and Windows devices, among others.

Symbols: The included library features push buttons, pilot lights, tanks, sliders, meters, motors, pipes, valves and other common objects. Use the 1,000+ included symbols in your project, modify existing symbols to suit your needs, or create your own from scratch. InduSoft Web Studio supports 3rd party symbol libraries and graphic tools.

Tag Database: InduSoft Web Studio features an object oriented database with boolean, integer, real, strings, arrays, classes (structures), indirect tags and included system tags. Built-in functions allow you to create, delete, or modify the tags database settings during the runtime. This feature increases the flexibility to design generic templates that can be easily customized to each project, even during the runtime. InduSoft Web Studio also offers tag integration from a wide range of PLCs, including Schneider Electric.

Trends: Real-time and Historical trends, and SPC functionality are supported. Log data in binary format, or to any local or remote SQL database. Color or fill trends with graphic elements to enhance clarity of data. Date/Time based or numeric (X/Y plot) trends give you the flexibility to display information that best suits your application. InduSoft Web Studio supports vertical and horizontal trending.

Troubleshooting: Quickly debug and verify a project using local and remote tools for troubleshooting, including status fields, DatabaseSpy and LogWin. Capture screen open and close times, see communications in real-time, messages related to OPC, recipes/reports, security, database errors and even custom messages. Finish your project quickly using these powerful tools.

XML Screen Toolkit: Modify or create screens during the runtime, or import screens that you've created.*

**Additional licenses required.*
+Additional Microsoft Team Foundation Server licenses required.

Windows Embedded Partner

Certified Solutions at&t

MOTOROLA PartnerSelect ISV partner

CERTIFIED OPC

Microsoft Partner Independent Software Vendor (ISV)

Windows Server 2012

Windows 10

2010 ENGINEERS' CHOICE AWARDS — Software – HMI Software — *InduSoft Web Studio v6.1 + SP5*

2011 ENGINEERS' CHOICE AWARDS HONORABLE MENTION — Software – HMI Software — *InduSoft Web Studio v7.0*

2012 ENGINEERS' CHOICE AWARDS — Software – HMI Software — *InduSoft Web Studio v7.0 + SP1*

2013 ENGINEERS' CHOICE AWARDS WINNER — Software – HMI Software — *InduSoft Web Studio v7.1*

2013 ENGINEERS' CHOICE AWARDS WINNER — Software – Applications, monitoring — *BI Deshboard Template*

2013 ENGINEERS' CHOICE AWARDS WINNER — Software – Mobile apps for controls, automation, instrumentation — *Mobile Access*

2014 ENGINEERS' CHOICE AWARDS HONORABLE MENTION — Software – HMI Software — *InduSoft Web Studio v7.1 + SP2*

2014 ENGINEERS' CHOICE AWARDS WINNER — Software – Mobile apps for controls, automation, instrumentation — *Studio Mobile Access*

For more information, contact:

InduSoft Web Studio® is a comprehensive platform that includes all the tools you'll need to make SCADA and HMI applications that have real power behind them. The development environment allows you to develop once and deploy anywhere. InduSoft Web Studio supports all Windows runtime platforms (including 32 and 64 bit), ranging from Windows Embedded Compact, Windows Embedded Standard, Vista, Windows 7, Windows 8, and Windows Server Editions (Server 2008 R2, Server 2012), along with built-in support for local or remote (web) based visualization. New in 8.0, InduSoft Web Studio offers a core runtime available for Linux and other embedded platforms.

Build powerful graphical displays, and take advantage of the 250+ available communication drivers for all major PLC products. InduSoft Web Studio includes OPC UA, OPC.NET and OPC Classic (HDA and DA), trends, alarms, reports, recipes and built-in SQL database support as standard features.

[illegible] LLC. All Rights Reserved.
InduSoft® and InduSoft Web Studio® are registered trademarks of Schneider Electric Software, LLC.
Microsoft® and Windows® are registered trademarks of Microsoft Corporation.
All other trademarks are the property of their respective owners.

Visit us online: InduSoft.com
E-mail: info@indusoft.com

elo TOUCH SOLUTIONS

PRODUCT OVERVIEW

- Sleek and thin design with "Built for Touch" reliability
- 60% energy savings using LED technology
- Removable base and VESA mount
- 3-year standard warranty

2201L 22" Desktop Touchmonitor

The Elo Touch Solutions 2201L is a flexible, space-saving, HD wide-aspect ratio 22" LCD touchmonitor well-suited to meet durability and aesthetic requirements for front-of-store, back office, kiosk and even out-of-store applications. The Elo 2201L offers real versatility for a variety of retail and hospitality interactive solutions including:

- Promotion of cross-channel, online sales in the store (shoppers purchase items online in the store for home delivery or shop for sold out or unavailable merchandise in additional store locations)
- Hostess stations that require large screens to view restaurant layouts/seating charts
- Back office solutions integrating labor management and inventory analysis
- Customer assist and self-service solutions (theaters, hotels, auto dealerships)
- Shelf-level/countertop interactive digital signage displays
- HD video capabilities for interactive lifestyle marketing in larger retail/lifestyle stores

Available with iTouch zero-bezel, IntelliTouch Plus multi-touch surface acoustic wave (SAW) touchscreen technology, and zero-bezel projected capacitive (PCAP) multi-touch, the 2201L is compatible with Windows 7 and 8, and provides stable, "drift-free" operation with excellent image clarity, resolution, and light transmission—for an accurate touch response and vivid images. The 2201L is distinctive by incorporating state-of-the-art LED backlights that reduce the energy consumption of the higher energy consumption of CCFL backlights often used by other touchmonitors.

Wide-aspect displays like the Elo Touch Solutions 2201L are easier to use and incorporate into the workplace than traditional desktop touchmonitors. Wide-screen format displays allow extra content on the screen and are quickly becoming preferred in corporate environments for publishing and dual window applications, and are popular in public venue environments due to a high-definition cinematic-like experience.

Features

- Touchscreen technologies: iTouch zero-bezel, IntelliTouch Plus multi-touch or zero-bezel PCAP multi-touch
- High definition LCD display offers ultimate HD interactivity, clarity and resolution
- USB touch controller, DVI, VGA and built-in speakers for a rich audio experience
- Removable base and mounting features, including a VESA mount as well as wall- and arm-mounting options for installation flexibility
- Ruggedized for use in high-traffic environments
- Optional peripherals include field-installable 3-stripe MSR and web camera

Applications

- Point-of-information
- Hostess stations
- Self-service
- Countertop interactive digital signage

About Elo

Elo founders pioneered the touch screen over 40 years ago. Today, Elo Touch Solutions is a leading global supplier of touch-enabled technology, products and industry solutions. The Elo portfolio encompasses the broadest selection of OEM touchscreen components, touchmonitors, and all-in-one touchcomputers for the demanding requirements of diverse markets, including gaming machines, hospitality systems, industrial automation, interactive kiosks, healthcare, office equipment, point of sale terminals, retail displays, and transportation applications. The Elo touch experience has consistently stood for quality, reliability and innovation with over 20 million installations worldwide.

© 2014 Elo Touch Solutions, Inc. All rights reserved.

2201L 22" Desktop Touchmontior Specifications

Bezel Color	Black
Active Display Area	18.8" x 10.6" (477mm x 268mm)
Dimensions*	21.7" x 7.6" x 15.4" (551mm x 193mm x 392mm) max
LCD Technology	Active Matrix TFT LCD with LED backlighting
Display Size	21.5" diagonal
Aspect Ratio	16:9
Native Resolution	1920x1080
Other Supported Resolutions	640x480 60Hz; 720x576 50Hz; 800x600 56, 60Hz; 1024x768 60Hz; 1280x720 50, 60Hz; 1280x960 60Hz; 1280x1024 60Hz; 1366x768 60Hz; 1440x900 60Hz; 1680x1050 60Hz; 1920x1080 50, 60Hz
Color	16.7 million
Brightness (typical)	LCD Panel: 250 nits; with IntelliTouch Plus: 225 nits; with iTouch: 225 nits; with PCAP: 225 nits
Response Time (Tr + Tf) (typical))	5 ms
Viewing Angle (typical)	Horizontal: ±85° or 170° total; Vertical: ±80° or 160° total
Contrast Ratio (typical)	1000:1
Video	Analog VGA on Female DE-15 connector; Digital DVI on Female DVI-D connector; Input Video Horizontal Sync frequency range: 31.5-80KHz; Input Video Vertical Sync (frame rate) frequency range: 50-75Hz
Power**	Monitor input power connector: Coaxial power jack (2mm pin outer diameter, 6.4mm barrel inner diameter); Monitor input power signal specifications: 12VDC ±5% Adapter input voltage range: 100-240VAC, 50/60Hz Power Consumption (typical): ON (monitor only, no audio): 22W ON (monitor + AC/DC adapter at 230V/50Hz, no audio): 25W ON (monitor + AC/DC adapter at 230V/50Hz, with audio): 29W SLEEP (monitor + AC/DC adapter at 230V/50Hz, no audio): 2.2W OFF (monitor + AC/DC adapter at 230V/50Hz, no audio): 1.1W
Audio	Audio input connector: 3.5mm TRS jack Input signal range: 1Vrms maximum stereo signal (standard PC Line Out) Internal Speakers output: Two 2W speakers Headphone output: 3.5mm TRS jack
On-Screen Display (OSD)	Accessible through switches on the bottom. Controls: Menu, Up, Down, Select; Settings: Brightness, Contrast, Clock, Phase, H-position, V-position, Auto-Adjust, Aspect Ratio, Sharpness, Color Temperature, OSD Timeout, OSD Language, OSD Rotation, Volume, Mute, Recall Defaults, Video Source; Languages: English, French, Italian, German, Spanish, Simplified Chinese, Traditional Chinese, Japanese; Lockouts: OSD, Power
Mounting Options	VESA 4-hole 100mm mounting interface on rear of unit 4-hole 200x100mm threaded mounting on bottom of stand
Weight	Unpackaged: 16.5lbs (7.5kg); Packaged: 27.6lbs (12.5kg)
Temperature	Operating: 32°F to 104°F (0°C to 40°C); Storage: (-4°F to 140°F) -20°C to 60°C
Humidity (non-condensing)	Operating: 20%-80%; Storage: 10%-90%
Regulatory Approvals and Declarations	C-Tick; cUL, IC; CCC; CE; VCCI; KCC; e-Standby; NOM; BSMI; UL, FCC; CB; RoHS, China RoHS, WEEE, IMERC
Warranty	3 years
MTBF	50,000 hours demonstrated

*See dimensional drawings for details

**Note: This monitor is sold with an AC/DC Power adapter

Ordering Information

Model	Part Number	Technology	Interface	Bezel	Surface Treatment	Availability
2201L	E107766	IntelliTouch Plus	USB	Yes	Clear	Worldwide
	E382790	iTouch	USB	No	Clear	Worldwide
	E497002	Projected capacitive	USB	No	Clear	Worldwide

Optional Peripherals

Peripheral	Part Number
Web cam	E489785
Magnetic Stripe Reader (MSR)	E757859

To find out more about our extensive range of Elo touch solutions, go to **www.elotouch.com**, or call the office nearest you.

North America
Elo Touch Solutions
1033 McCarthy Boulevard
Milpitas, CA 95035

800-ELO-TOUCH
Tel +1 408 597 8000
Fax +1 408 597 8001
customerservice@elotouch.com

Europe
Tel +32 (0)16 70 45 00
Fax +32 (0)16 70 45 49
elosales@elotouch.com

Asia-Pacific
Tel +86 (21) 3329 1385
Fax +86 (21) 3329 1400
www.elotouch.com.cn

Latin America
Tel 786-923-0251
Fax 305-931-0124
www.elotouch.com

Elo Touch Solutions, Inc. reserves the right to change or update, without notice, any information contained herein; to change, without notice, the design, construction, materials, processing or specifications of any products; and to discontinue or limit production or distribution of any products. Elo (logo) and Elo Touch Solutions are trademarks of Elo Touch Solutions, Inc. Copyright 2014 Elo Touch Solutions, Inc. All rights reserved. D5000053 rev C 09/14

© 2014 Elo Touch Solutions, Inc. All rights reserved.

MicroComm DXL

DXL
System Data Sheet

Description

The MicroComm DXL digital intercom system is designed to be cost effective for applications with widely distributed architectures and those of a smaller scale. It is also ideally suited for adding functionality and flexibility when retrofitting relay switched intercom systems. A comprehensive feature set gives the MicroComm DXL the power to handle projects with the most demanding requirements, and like all MicroComm family members, it incorporates digital audio technology and provides a high performance, rugged, and reliable communication solution.

Two basic building blocks form the backbone of the system. Digital Communication Controllers (DCC) are the master component of each exchange and can be interconnected to form larger systems. They incorporate the exchange processor, control software, configuration data, and network ports as well as the intercom station, master station, and audio interface boards. Digital Communication Expanders (DCE) and Talk Back Expanders (TBE) are used to increase the capacity of each exchange. Up to four DCE and/or TBE expander units can be connected to each DCC controller.

The MicroComm DXL is compatible with the same set of intercom stations, master stations, and call devices as the rest of the MicroComm family. The wide and growing variety of standard stations and specialty stations is therefore available for your use, regardless of which MicroComm system you choose.

A key feature of the MicroComm DXL is the DXL Administrator Software. This Windows Explorer style user interface runs on a standard PC and provides system configuration, logging, and diagnostic functions. With its easy to follow tree structure, simple to understand data entry dialogs, copy and paste device creation feature, and built-in device libraries, a MicroComm DXL is easy and quick to program.

FEATURES

System Architecture

- Simple, modular system architecture
- Digital audio trunks and signal processing
- Each exchange can function independently
- Exchanges can be networked to form large systems
- Unrestricted communications within each exchange
- Twenty-six channel audio trunk interconnects exchanges
- Supports MicroComm family master stations
- Full touch screen and graphic panel master control
- Telephone sets provide administrative master functions
- Supports MicroComm family intercom stations
- Supports generic 25 volt intercom stations
- Supports MicroComm Discrete Input/Output modules
- 64 x 128 pixel graphics display

- Eleven button keypad with menu driven interface
- Built-in monitoring and self-test routines

Operating Features

- Paging and program distribution to audio outputs and stations
- Audio Level Alarm threshold detection
- Sequential and group audio listen-in monitoring
- Hands free and press-to-talk operator control
- Multiple priority levels for each category
- Individual audio control for each channel
- Master groups for parallel operator control
- Six program distribution channels in each exchange
- Six system wide program distribution channels
- Flexible operational tone signaling
- Time clock and event controlled tone signaling
- Tones and messages recorded as WAV audio files
- Master station and visiting booth call recording
- Unit unmanned and time out call forwarding
- Call and program switch enabling/disabling
- Flexible display master menu architecture
- CCTV switcher and visiting booth support

DXL Administrator Software Features

- Windows Explorer style configuration

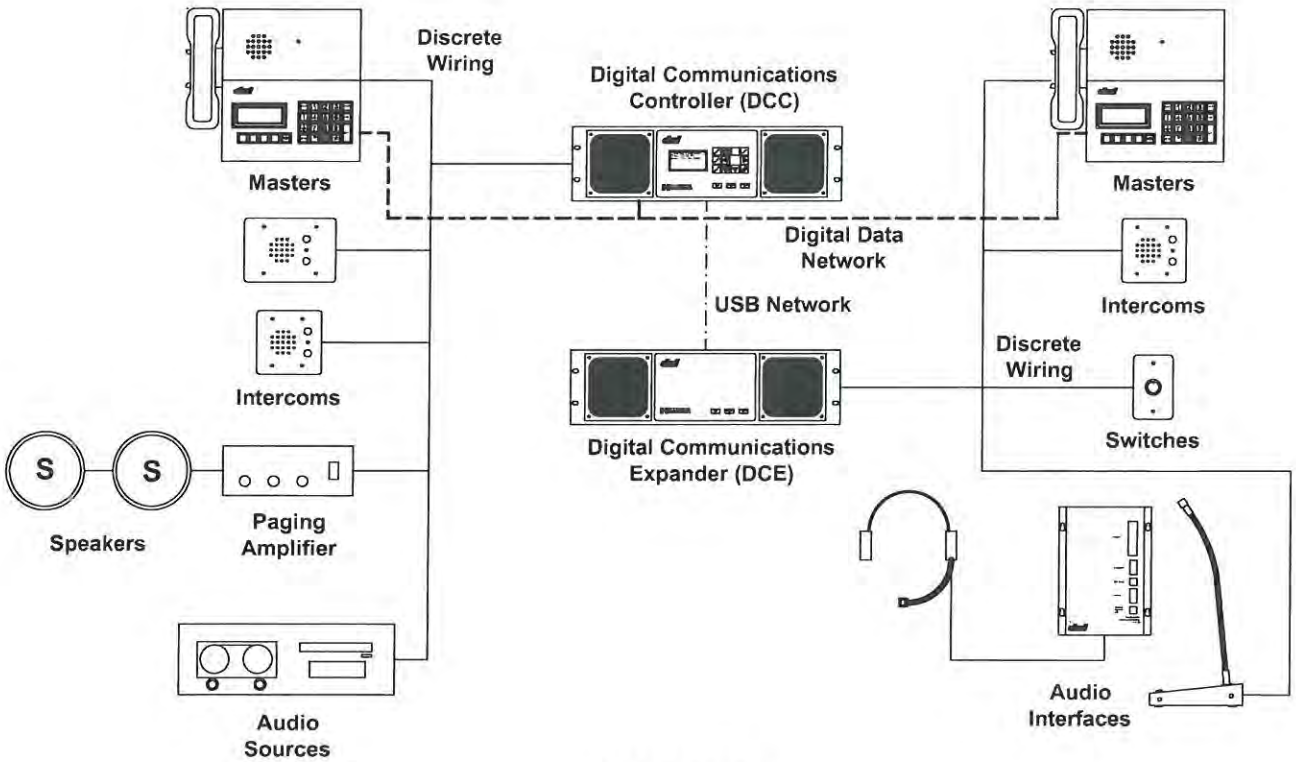

DXL Exchange

- Operates on standard PC or laptop computer
- Loads and validates configuration files
- Functions both on-line and off-line
- Provides configuration, logging, and diagnostics
- Devices displayed in both tabular and window formats
- Device library included for standard devices
- Add new devices with copy and paste commands
- Remote system access available via modem
- Manages the entire system through a single port
- Manages system security features

Specifications

General	
Audio band width	300-3,500 Hz
Audio Signal Processing	Digital
Audio Switching System	Digital Time Space Switching
Control Network	Ethernet and USB
I/O Network	LonWorks
Identification Numbers (up to 5 digits)	99999
DCC/DCE Capacity	
Intercom Stations (half duplex)	32
Master Stations	2
Audio line inputs	2
Audio line outputs	2
Exchange Capacity	
Intercom Stations (half duplex)	160
Master Stations	10
Audio line inputs	10
Audio line outputs	10
System Capacity	
Exchanges	32
Intercom Stations (half duplex)	5120
Audio Line Inputs	320
Audio Line Outputs	320

Document # DS-DXL-SYS-1.7 • Copyright © 2004 Harding Instrument Co. Ltd. • All Specifications subject to change without notice • Printed in Canada

HARDING

7741 Wagner Road NW
Edmonton, AB T6E 5B1
sales@harding.ca

Tel 780.462.7100
Fax 780.450.8396
www.harding.ca

Registered ISO 9001 Quality System

Represented by:

exacq

From Tyco Security Products

exacqVision A-Series

Proven, Versatile IP Network Video Recorders

- **Proven Performance**
  - Continuously record up to 550 Mbps of video for high concentration of high definition analog and IP cameras
  - Stream up to 1,800 frames/second of live/recorded video to local/web/mobile clients
  - Stream live/recorded video up to 100 simultaneous PC clients
  - Optional quad NICs for fastest archiving or mass client performance
- **Designed Video Server Reliability**
  - Minimize system boot time and failure risk with a high reliability solid-state operating system drive
  - Continuous duty hard drives optimized for reduced vibration and heat
  - Uninterrupted operation and video preservation in event of one drive failure via optional 4U RAID5
  - Protects against single power failure with optional 4U redundant power supplies
  - Monitors hardware health in exacqVision client with email/text notifications
- **Capacity for Mainstream Recording**
  - Record up to 64 IP cameras per video server
  - Includes 4 IP camera licenses
  - Store up to 48TB of video
  - Expandable to over 1.6PB with S-Series networked storage
  - Compatible with thousands of IP camera models
- **Hosted Certified Software Applications (CSA)**
  - Install CSAs such as video analytics, access control, POS software on recorder
  - Save money and rack space with single video security server
  - Tested by Exacq to ensure compatibility
- **3-Year Warranty**
  - Constantly increase VMS features with regular software updates
  - Includes a 3-year hardware warranty
  - 3 years of unlimited software updates included
- **Powerful Video Management System (VMS) Software**
  - Pre-loaded with exacqVision Professional software (standard)
    - EasyConnet automatically finds, addresses and connects IP cameras
    - Two-way audio
    - Conduct investigations on recorded video, audio and data with thumbnail or timeline search
    - Bookmark important video for long-term retention
  - Easily license additional IP cameras and change out cameras
  - View video anywhere (standard)
    - Unlimited Windows/Linux/Mac PC clients
    - Live and recorded video from any browser
    - Live and recorded video from most tablets and smartphones

exacq

From Tyco Security Products

SETTINGS	2U SERVER	4U SERVER	DESKTOP SERVER
Maximum IP Cameras	64	64	64
Included IP Licenses	4	4	4
SERVER	**2U SERVER**	**4U SERVER**	**DESKTOP SERVER**
Pre-Loaded VMS Software	Professional (standard), Enterprise (optional)	Professional (standard), Enterprise (optional)	Professional (standard), Enterprise (optional)
Typical Video Storage Rate (Mbps)	300 Mbps (Windows) 450 Mbps (Linux)	350 Mbps (Windows) 550 Mbps (Linux)	250 Mbps (Windows) 300 Mbps (Linux)
Local Client Display Rate (FPS)	CPU - Standard/i5/i7 Windows - 480/1100/1800 Linux - 600/1000/1200	CPU - Standard/i5/i7 Windows - 480/1100/1800 Linux - 600/1000/1200	CPU - Standard/i5/i7 Windows - 480/1100/1800 Linux - 600/1000/1200
Maximum Hard Drives	3	8	2
Maximum Storage	18 TB	48 TB (RAID 5 Optional)	12 TB
Monitor Output	1 DVI-I + 1 HDMI + 1 DisplayPort, max 2 simulatenous monitors	1 DVI-I + 1 HDMI + 1 DisplayPort, max 2 simulatenous monitors	1 DVI-I + 1 HDMI + 1 DisplayPort, max 2 simulatenous monitors
Operating System	Windows 7 64-bit, Windows 2012 R2 (Optional) Ubuntu Linux 14.04	Windows 7 64-bit, Windows 2012 R2 (Optional) Ubuntu Linux 14.04	Windows 7 64-bit, Windows 2012 R2 (Optional) Ubuntu Linux 14.04
CPU	Gen 4 Intel Core i3, Intel Core i5 or i7 (Optional)	Gen 4 Intel Core i3, Intel Core i5 or i7 (Optional)	Gen 4 Intel Core i3, Intel Core i5 or i7 (Optional)
RAM	4 GB, 8 GB, 12 GB (Optional)	4 GB, 8 GB, 12 GB (Optional)	4 GB, 8 GB, 12 GB (Optional)
NIC	2, 4 (Optional)	2, 4 (Optional)	2, 4 (Optional)
USB	6 x USB 2.0, 2 x USB 3.0	6 x USB 2.0, 2 x USB 3.0	6 x USB 2.0, 2 x USB 3.0
DVD	Included	Included	Included
Audio Outputs	1	1	1
Keyboard & Mouse	Included	Included	Included
GENERAL	**2U SERVER**	**4U SERVER**	**DESKTOP SERVER**
Dimensions	21.25" x 16.75" x 3.5" 54.7 x 42.6 x 8.9 cm	28" x 16.75" x 7" 71.2 x 42.6 x 17.8 cm	15.675" x 13" x 5.375" 39.7 x 33.1 x 14.6 cm
Weight	27 - 31 lbs. 12.3 - 14.1 kg	44 - 60 lbs. 20 - 27.3 kg	18.5 - 22 lbs. 8.4 - 10 kg
Regulatory	CE, FCC, cULus, UL Listed	CE, FCC, cULus, UL Listed	CE, FCC, cULus, UL Listed
Power Supply	Single	Single (Dual Optional)	Single
Operating Temperature	40° - 95° F 4.5 ° - 35 ° C	40° - 95° F 4.5 ° - 35 ° C	40° - 95° F 4.5° - 35° C

Related Products

exacqVision VMS Software

Exacq Mobile App

exacqVision E-Series Encoders

exacqVision A-Series hybrid NVR

exacqVision Surveillance Keyboard

www.exacq.com

© 2015 Tyco Security Products. All Rights Reserved.
Tyco and the product names listed above are marks and/or registered marks. Unauthorized use is strictly prohibited. Product offerings and specifications are subject to change without notice. Actual products may vary from photos. Not all products include all features. Availability varies by region; contact your sales representative.