EXISTING STRUCTURE

108" +/− DIAMETER CORRUGATED STEEL PIPE CULVERT.

PROPOSED STRUCTURE NO: 032-4230

THE PROPOSED STRUCTURE IS A PRECAST, PRESTRESSED CONCRETE DECK BEAM BRIDGE ON METAL SHELL PILE ABUTMENTS. SINGLE SPAN AT 48'−3" BK TO BK OF ABUTMENTS, 28'−0" OUT TO OUT OF DECK, AND 23° 30' LT FWD SKEW.

STATE OF ILLINOIS
DEPARTMENT OF TRANSPORTATION
DIVISION OF HIGHWAYS

PLANS FOR PROPOSED
TOWNSHIP BRIDGE PROGRAM PROJECT
T.R. 93 (GREER ROAD OVER BILL'S RUN)
SECTION 10-14111-00-BR
GRUNDY COUNTY
NORMAN TOWNSHIP

INDEX OF SHEETS

1	COVER SHEET
2	GENERAL NOTES, TYPICAL SECTIONS, AND TRAFFIC CONTROL
3	SUMMARY OF QUANTITIES
4	PLAN AND PROFILE
5	GENERAL PLAN AND ELEVATION
6	SUBSTRUCTURE AND SUPERSTRUCTURE DETAILS
7−8	P21"X48" PPC DECK BEAM DETAILS
9	STEEL RAILING, TYPE S−1
10	WEST ABUTMENT
11	EAST ABUTMENT
12	METAL SHELL PILE DETAILS
13−14	SOIL BORINGS
15−17	CROSS SECTIONS

HIGHWAY STANDARDS

000001−06	STANDARD SYMBOLS, ABBREVIATIONS AND PATTERNS
515001−03	NAME PLATE FOR BRIDGES
701901−05	TRAFFIC CONTROL DEVICES
BLR 21−9	TYPICAL APPLICATION OF TRAFFIC CONTROL DEVICES FOR CONSTRUCTION ON RURAL LOCAL HIGHWAYS
BLR 22−7	TYPICAL APPLICATION OF TRAFFIC CONTROL DEVICES FOR CONSTRUCTION ON RURAL LOCAL HIGHWAYS (TWO−LANE TWO WAY RURAL TRAFFIC)(ROAD CLOSED TO THRU TRAFFIC)

STRUCTURAL DESIGN DATA

FUNCTION CLASSIFICATION: LOCAL ROAD/STREET
ADT <150

DESIGN SPEED 30 MPH

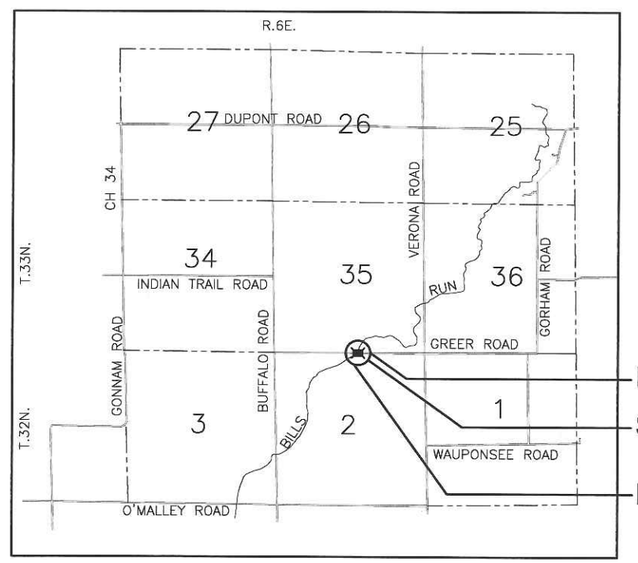

LOCATION SKETCH

NOT TO SCALE

GROSS LENGTH= 300 FT (0.057 MI) NET LENGTH= 300 FT (0.057 MI)

LOCATION OF SECTION INDICATED THUS:

JULIE 1−800−892−0123

5/13/16 date — JAMES K. CLINARD, LICENSED PROFESSIONAL ENGINEER NO. 062-041793, STATE OF ILLINOIS — expires 11-30-2017 — signature

5/13/16 date — JAMES K. CLINARD, LICENSED STRUCTURAL ENGINEER NO. 081-004655, STATE OF ILLINOIS — expires 11-30-2016 — signature

PROFESSIONAL DESIGN FIRM LICENSE NO. 184-001717

APPROVED 5/13 20 16
Brad Baker
TOWNSHIP COMMISSIONER

APPROVED 5/13 20 16
Cy Carr
COUNTY ENGINEER

PASSED _____ 20___
DISTRICT ENGINEER OF LOCAL ROADS & STREETS

APPROVED _____ 20___
DISTRICT ENGINEER

STATE OF ILLINOIS
DEPARTMENT OF TRANSPORTATION

DRAWN BY: ARR	CAD: 001−COVER	REVISIONS DATE / BY	SCALE: AS NOTED	SHEET 1	
CHECKED BY: JKC	DATE: 04/16		FILE NO.: 11912.00Y−1	OF 17	

GENERAL NOTES

1. FOR STABILIZATION, ALL TYPE III BARRICADES SHALL REQUIRE A MINIMUM OF FOUR (4) SAND BAGS PER BARRICADE.

2. SEEDING WILL NOT BE PERMITTED AT ANY TIME WHEN THE GROUND IS FROZEN, WET OR IN AN UNTILLABLE CONDITION. AREAS TO BE SEEDED SHALL BE DETERMINED.

3. ANY REFERENCE TO A STANDARD IN THESE PLANS SHALL BE INTERPRETED TO MEAN THE EDITION AS INDICATED BY THE SUBNUMBER LISTED IN THE INDEX OF SHEETS OR THE COPY OF THE STANDARD INCLUDED IN THESE PLANS.

4. WHERE SECTION OR SUBSECTION MONUMENTS ARE ENCOUNTERED, THE ENGINEER SHALL BE NOTIFIED BEFORE SUCH MONUMENTS ARE REMOVED. THE CONTRACTOR SHALL PROTECT AND CAREFULLY PRESERVE ALL MONUMENTS UNTIL AN AUTHORIZED SURVEY OR AGENT HAS WITNESSED OR OTHERWISE REFERENCED THEIR LOCATION. THE CONTRACTOR SHALL BE RESPONSIBLE FOR HAVING AN AUTHORIZED SURVEYOR REESTABLISH ANY SECTION OR SUBSECTION MONUMENTS DESTROYED BY HIS OPERATIONS.

5. THE FOLLOWING RATES OF APPLICATION HAVE BEEN USED IN CALCULATING PLAN QUANTITIES:

GRANULAR MATERIALS	2.05	TONS / CU YD

6. THE FINISHED EARTHWORK SHALL HAVE A VEGETATIVE SUSTAINING SOIL COVERING THE TOP 4 INCHES IN AREA TO BE SEEDED. THE VEGETATIVE SUSTAINING SOIL WILL NOT BE PAID FOR SEPARATELY BUT SHALL BE INCLUDED IN THE COST OF FURNISHED EXCAVATION.

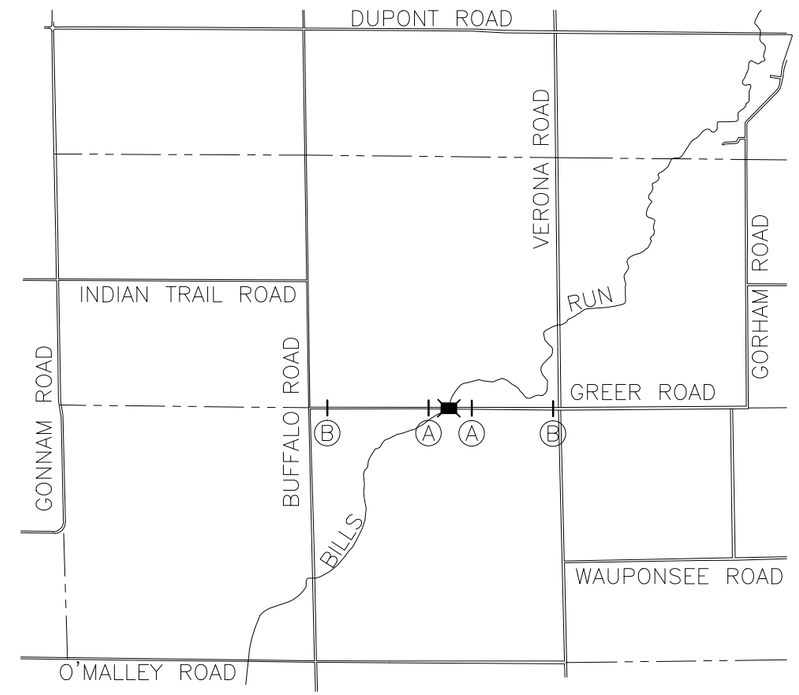

TRAFFIC CONTROL PLAN

Ⓐ ERECT TYPE III BARRICADES AT STA. 7+50 AND 12+50 AND "ROAD CLOSED 500 FT" AND "ROAD CLOSED AHEAD" SIGNS IN ACCORDANCE WITH HIGHWAY STD. BLR-21.*

Ⓑ ERECT TYPE III BARRICADES AT THE INTERSECTIONS INDICATED IN ACCORDANCE WITH HIGHWAY STD. BLR-22. ADVANCED WARNING SIGNS SHALL ALSO BE PLACED IN ACCORDANCE WITH HIGHWAY STD. BLR-22.*

* THIS WORK WILL NOT BE PAID FOR SEPARATELY. THE COST SHALL BE CONSIDERED INCLUDED IN OTHER WORK.

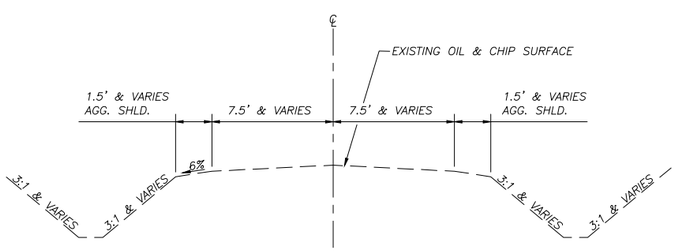

EXISTING TYPICAL SECTION

NOT TO SCALE

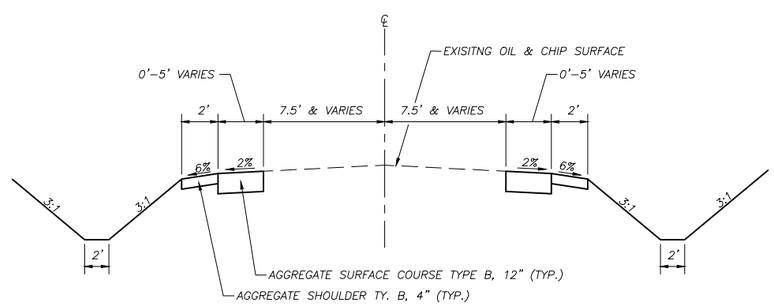

PROPOSED TYPICAL SECTION

NOT TO SCALE
STA. 8+50 TO STA. 9+50
AND
STA. 10+50 TO STA. 11+50

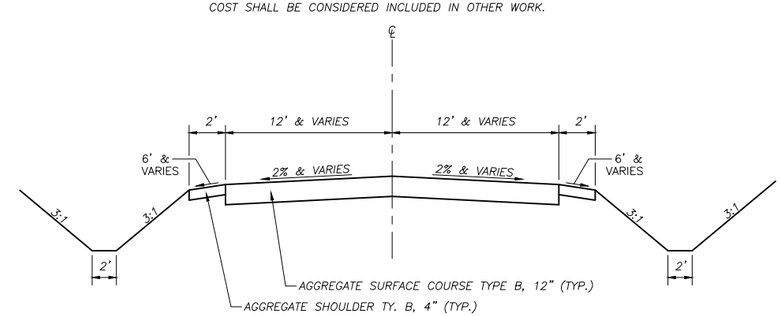

PROPOSED TYPICAL SECTION

NOT TO SCALE
STA. 9+50 TO STA. 10+50
BRIDGE OMISSION
STA. 9+71.49 TO STA. 10+21.32

CHAMLIN & ASSOCIATES, INC. ©2010
Drawing Name: G:\Users\11\11912-00-Grundy-County-Greer-Road-Culvert\CAD\002-General Notes.dwg Last Modified: May 03, 2016 - 9:03am Plotted on: May 03, 2016 - 9:34am by nanciv

DRAWN BY: ARR	REVISIONS			
CHECKED BY: JKC	LEVEL	BY	DATE	DESCRIPTION
DATE: 04/16				

CHAMLIN & ASSOCIATES

PERU MORRIS ILLINOIS

GREER ROAD OVER BILL'S RUN
SECTION 10-14111-00-BR
NORMAN TOWNSHIP
GRUNDY COUNTY

GENERAL NOTES, TYPICAL SECTION, AND TRAFFIC CONTROL

CONSTRUCTION PLANS

CURRENT AS OF: 05/03/2016

SCALE: AS NOTED

SHEET 2 OF 17

FILE NO.: 11912.00 Y-

SUMMARY OF QUANTITIES

ITEM NO.	DESCRIPTION	UNIT	QUANTITY
20100110	TREE REMOVAL (6 TO 15 UNITS DIAMETER)	UNIT	8
20200100	EARTH EXCAVATION	CU YD	60
20300100	CHANNEL EXCAVATION	CU YD	495
20400800	FURNISHED EXCAVATION	CU YD	39
25000200	SEEDING, CLASS 2	ACRE	0.08
25000400	NITROGEN FERTILIZER NUTRIENT	POUND	7
25000500	PHOSPHORUS FERTILIZER NUTRIENT	POUND	7
25000600	POTASSIUM FERTILIZER NUTRIENT	POUND	7
25100115	MULCH, METHOD 2	ACRE	0.08
28100107	STONE RIPRAP, CLASS A4	SQ YD	343
28200200	FILTER FABRIC	SQ YD	343
40200800	AGGREGATE SURFACE COURSE, TYPE B	TON	118
48101200	AGGREGATE SHOULDERS, TYPE B	TON	26
50100100	REMOVAL OF EXISTING STRUCTURES	EACH	1
50200100	STRUCTURE EXCAVATION	CU YD	93
50300225	CONCRETE STRUCTURES	CU YD	24.8
50300280	CONCRETE ENCASEMENT	CU YD	5
50400405	PRECAST PRESTRESSED CONCRETE DECK BEAMS (21" DEPTH)	SQ FT	1311
50800105	REINFORCEMENT BARS	POUND	2700
50900205	STEEL RAILING, TYPE S1	FOOT	94
51200957	FURNISHING METAL SHELL PILES 12" X 0.250"	FOOT	270
51202305	DRIVING PILES	FOOT	270
51203200	TEST PILE METAL SHELLS	EACH	2
51500100	NAME PLATES	EACH	1
70101830	TRAFFIC CONTROL AND PROTECTION, STANDARD BLR 21	L SUM	1
70101835	TRAFFIC CONTROL AND PROTECTION, STANDARD BLR 22	L SUM	1
78201000	TERMINAL MARKER - DIRECT APPLIED	EACH	4
X5860110	GRANULAR BACKFILL FOR STRUCTURES	CU YD	22

EARTHWORK SCHEDULE

LOCATION	EARTH EXCAVATION	UNSUITABLE MATERIAL (ROADWAY AGGREEGATE)	EARTH EXCAVATION ADJUSTED FOR SHRINKAGE	EMBANKMENT	EARTHWORK BALANCE WASTE (+) OR SHORTAGE (-)
	CU. YD.	CU. YD.	CU. YD.	CU. YD.	CU. YD.
MAINLINE					
STA 8+50 TO STA 11+50	59.6	30.0	22.2	61.5	-39.3
TOTAL	**60**	**30**	**22**	**62**	**-39**
					FURNISHED EXCAVATION

CHAMLIN & ASSOCIATES, INC. © 2010
Drawing Name: G:\Users\11\11912-00-Grundy-County-Greer-Road-Culvert\CAD\003-SUMQUANS.dwg Last Modified: May 03, 2016 - 9:05am Plotted on: May 03, 2016 - 9:36am by nancjv

DRAWN BY: ARR
CHECKED BY: JKC
DATE: 04/16

REVISIONS

LEVEL	BY	DATE	DESCRIPTION

CHAMLIN & ASSOCIATES
PERU MORRIS ILLINOIS

GREER ROAD OVER BILL'S RUN
SECTION 10-14111-00-BR
NORMAN TOWNSHIP
GRUNDY COUNTY

SUMMARY OF QUANTITIES

CONSTRUCTION PLANS

CURRENT AS OF: 05/03/2016
SCALE: AS NOTED
SHEET 3
FILE NO.: 11912.00 Y-1
OF 17

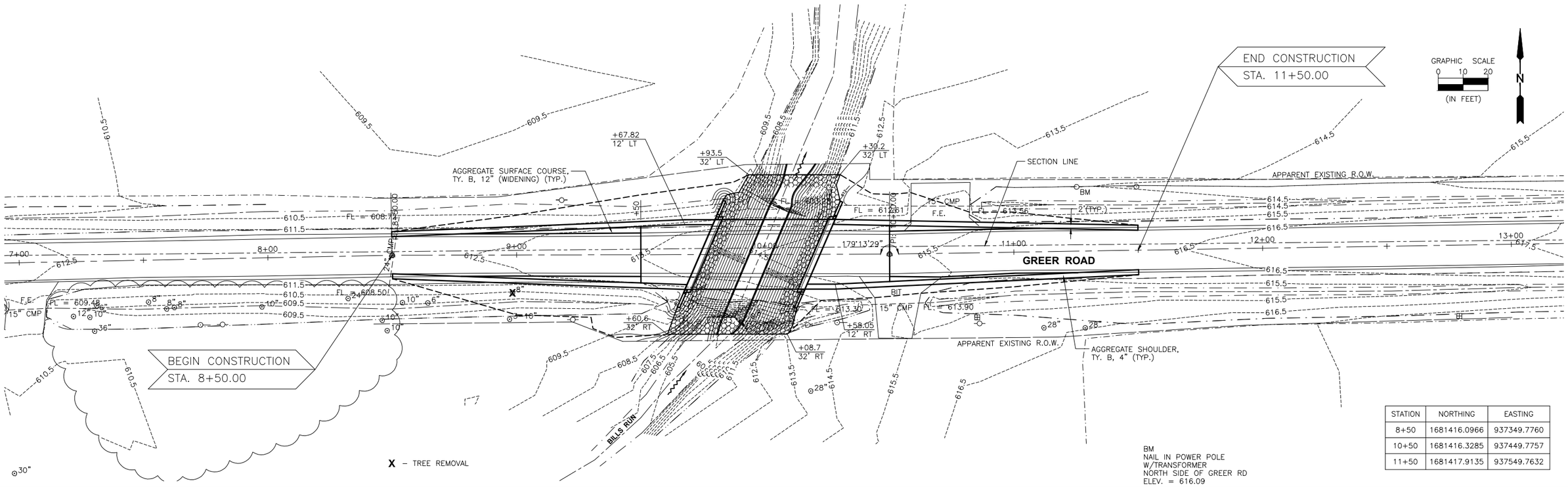

STATION	NORTHING	EASTING
8+50	1681416.0966	937349.7760
10+50	1681416.3285	937449.7757
11+50	1681417.9135	937549.7632

BM
NAIL IN POWER POLE
W/TRANSFORMER
NORTH SIDE OF GREER RD
ELEV. = 616.09

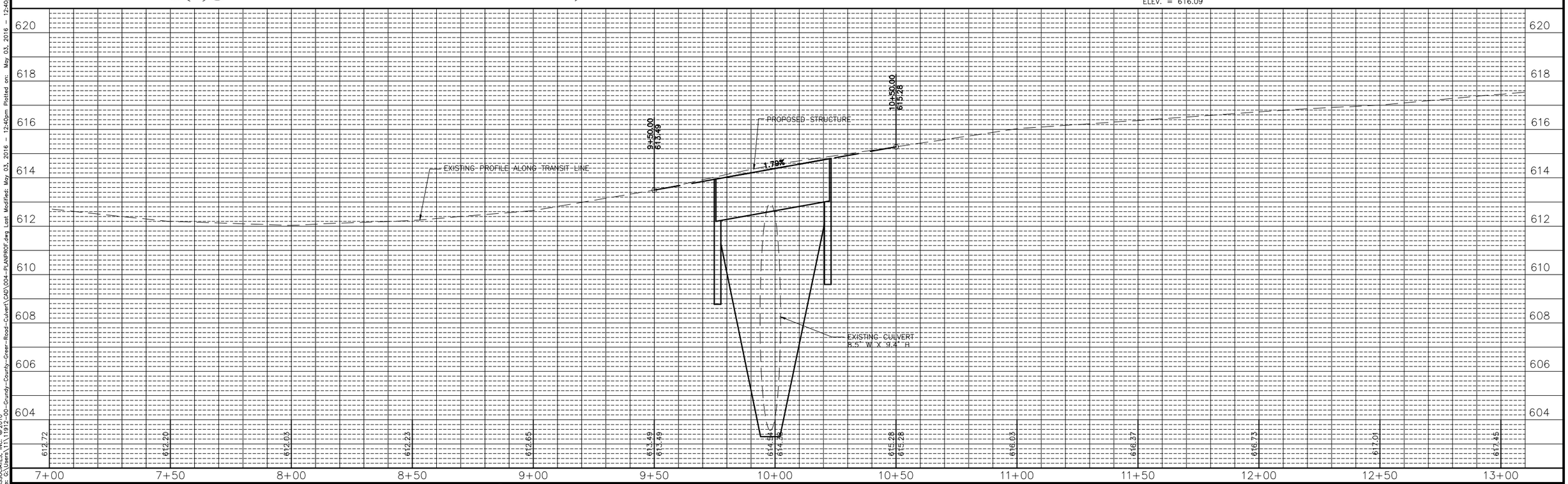

DRAWN BY: ARR	REVISIONS		
CHECKED BY: JKC	LEVEL / BY / DATE / DESCRIPTION		
DATE: 04/16			

CHAMLIN & ASSOCIATES

PERU MORRIS
ILLINOIS

GREER ROAD OVER BILL'S RUN
SECTION 10-14111-00-BR
NORMAN TOWNSHIP
GRUNDY COUNTY

PLAN AND PROFILE

CONSTRUCTION PLANS

CURRENT AS OF: 05/03/2016
SCALE: AS NOTED
SHEET 4 OF 17
FILE NO.: 11912.00Y–

CHAMLIN & ASSOCIATES, INC. ©2010
Drawing Name: G:\Users\11\11912-00-Grundy-County-Greer-Road-Culvert\CAD\004-PLANPROF.dwg Last Modified: May 03, 2016 - 12:40pm Plotted on: May 03, 2016 - 12:40pm by nancv

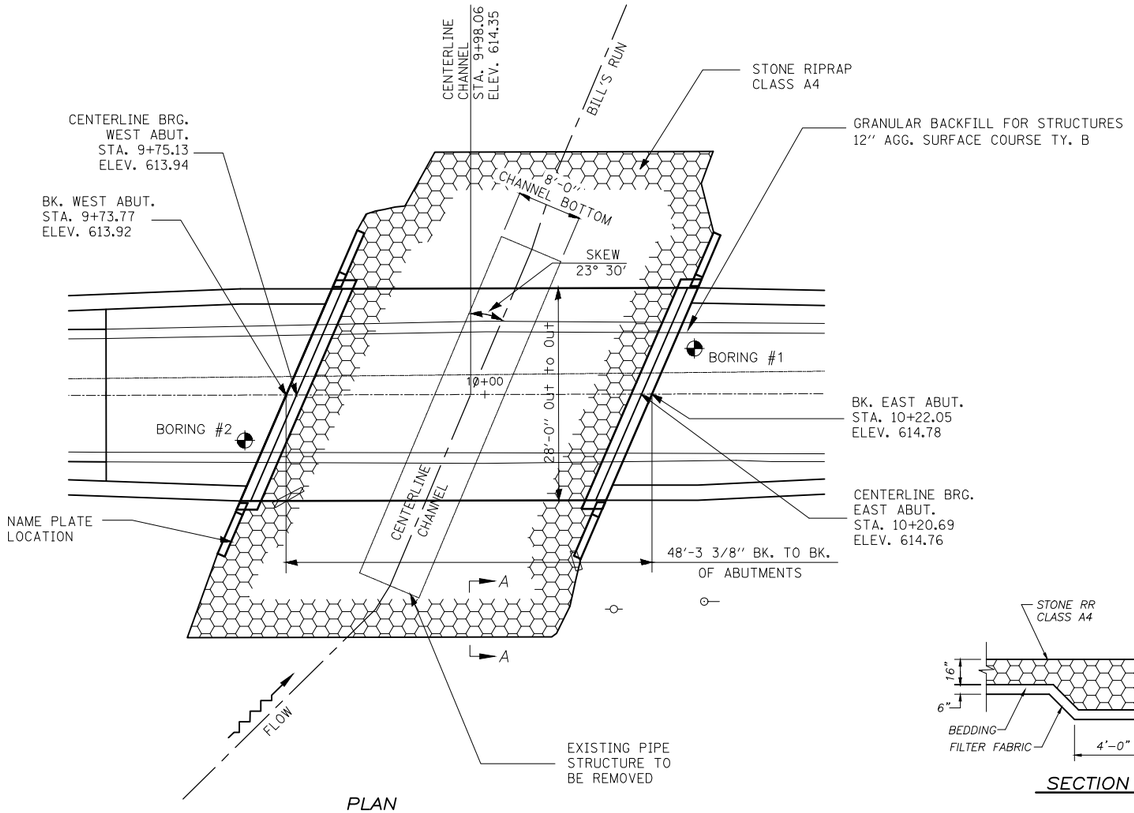

PLAN

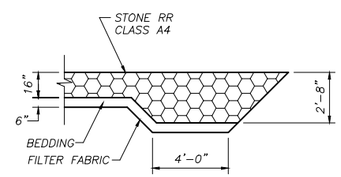

SECTION A–A

TOTAL BILL OF MATERIAL		
ITEM	UNIT	QUANTITY
CHANNEL EXCAVATION	CU YD	495
STRUCTURE EXCAVATION	CU YD	93
STONE RIPRAP CLASS A4	SQ YD	343
FILTER FABRIC	SQ YD	343
REMOVAL OF EXISTING STRUCTURES	EACH	1
CONCRETE STRUCTURES	CU YD	24.8
PRECAST PRESTRESSED CONCRETE DECK BEAMS	SQ FT	1311
REINFORCEMENT BARS	POUND	2700
STEEL RAILING, TYPE S-1	FOOT	94
FURNISHING METAL SHELL PILES 12" X 0.250"	FOOT	270
DRIVING PILES	FOOT	270
CONCRETE ENCASEMENT	CU YD	5
TEST PILE METAL SHELL	EACH	2
NAME PLATES	EACH	1

GENERAL NOTES:

1. FOR BORING DATA SEE SHEETS 13 & 14.
2. LAYOUT OF SLOPE PROTECTION SYSTEM MAY BE VARIED IN THE FIELD TO SUIT GROUND CONDITIONS AS DIRECTED BY THE ENGINEER.
3. CHANNEL EXCAVATION SHALL BE CONSIDER TO BE THE MATERIAL BETWEEN THE STREAM FACE OF THE ABUTMENTS LESS THE MATERIAL OVER, UNDER, AND 2' EACH SIDE OF THE EXISTING STRUCTURE. REMOVAL OF THIS MATERIAL AND THE PIPE HAVE BEEN CONSIDER INCLUDED IN THE COST OF REMOVAL OF EXISTING STRUCTURES.

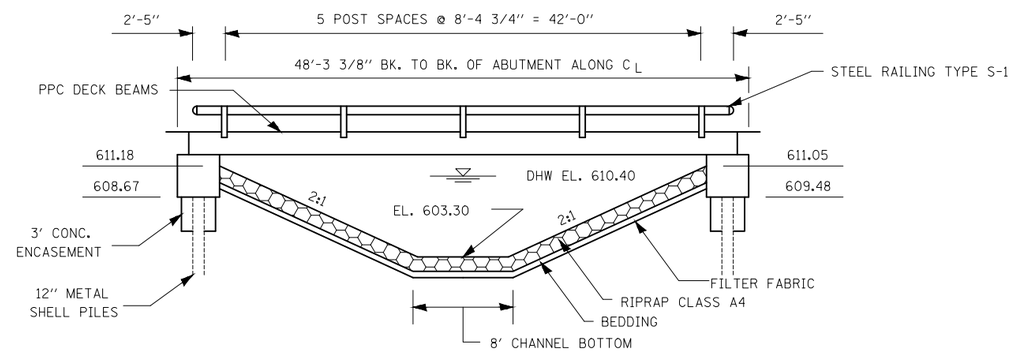

ELEVATION

Event/Limit State	Design Scour Elevations (ft.)				Item 113
	W. Abut.	Pier 1	Pier 2	E. Abut.	
Q100	--	--	--	--	8
Q200	--	--	--	--	
Design	608.67	--	--	609.48	
Check	608.67	--	--	609.48	

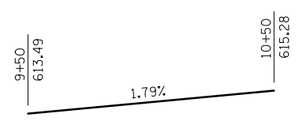

PROFILE GRADE

DESIGN SPECIFICATIONS

2014 AASHTO LRFD Bridge Design Specifications with 2015 & 2016 interims

DESIGN STRESSES

Precast units: Deck Beams
f'c= 6,000 PSI
f'ci= 5,000 PSI
fs'= 270,000 PSI (1/2 Dia. Strand)
fs'i= 201,960 PSI (1/2 Dia. Strand)
fy= 60,000 PSI (Reinf.)
Field units: Concrete Substructures
f'c= 3,500 PSI
fy= 60,000 PSI (Reinf.)
fy= 65,000 PSI (Welded wire fabric)

LOADING HL-93

Allow 50#/sq. ft. for future wearing surface

SEISMIC DATA

Seismic Performance Zone (SPZ) = 1
Design Spectral Acceleration at 1.0 sec. S_{D1} = 0.10g
Design Spectral Acceleration at 0.2 sec. S_{DS} = 0.18g
Soil Site Class = D

WATERWAY INFORMATION											
Drainage Area= 7.0 mi.² Low Grade Elev.= 612.0 @ sta. 8+00											
Flood	Freq. (Yr.)	Q C.F.S.	Opening ft.² Exist. Culvert	Exist. O.T.R.	Prop. Bridge	Prop. O.T.R.	Nat. H.W.E.	Head – ft. Exist.	Prop.	Headwater El. – ft. Exist.	Prop.
	10	389	58	0	148	0	610.2	1.8	0.0	612.0	610.2
Design	20	461	60	25	155	0	610.4	2.0	0.1	612.4	610.4
Base	100	626	62	90	168	0	610.8	2.0	0.1	612.9	610.9
Overtopping											
Max. Calc.	500	778	62	141	177	0	611.1	2.0	0.2	613.1	611.3

EXIST. 10 YEAR VELOCITY: 8.55 (FT./SEC.)
PROP. 10 YEAR VELOCITY: 2.63 (FT./SEC.)

I CERTIFY THAT TO THE BEST OF MY KNOWLEDGE, INFORMATION AND BELIEF, THIS BRIDGE DESIGN IS STRUCTURALLY ADEQUATE FOR THE DESIGN LOADING SHOWN ON THE PLANS. THE DESIGN IS AN ECONOMICAL ONE FOR THE STYLE OF STRUCTURE AND COMPLIES WITH REQUIREMENTS OF THE CURRENT "AASHTO LRFD BRIDGE DESIGN SPECIFICATIONS".

date

JAMES K. CLIKAARD
LICENSED STRUCTURAL ENGINEER NO. 081-004655
STATE OF ILLINOIS
expires 11-30-2016

signature

PROFESSIONAL DESIGN FIRM LICENSE NO. 184-001717

BILL'S RUN
BUILT 201_ BY
NORMAN TOWNSHIP
GRUNDY COUNTY
SEC. 10-14111-00-BR
STA. 9+98.06
STR. NO. 032-4230 LOADING HL-93

NAME PLATE (STD. 515001)

LOCATE NAME PLATE AT SOUTHWEST STRUCTURE WINGWALL

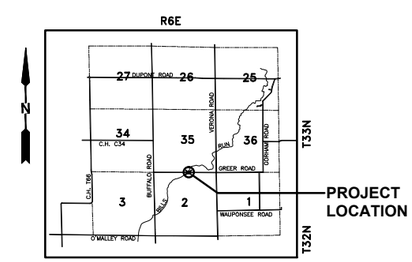

LOCATION SKETCH

NOT TO SCALE

DRAWN BY: ARR	REVISIONS			
CHECKED BY: JKC	LEVEL	BY	DATE	DESCRIPTION
DATE: 04/16				

CHAMLIN & ASSOCIATES

PERU MORRIS ILLINOIS

GREER ROAD OVER BILL'S RUN
SECTION 10-14111-00-BR
NORMAN TOWNSHIP
GRUNDY COUNTY

GENERAL PLAN AND ELEVATION

CONSTRUCTION PLANS

CURRENT AS OF: 05/03/2016
SCALE: AS NOTED
SHEET 5 OF 17
FILE NO.: 11912.00 Y-1

CHAMLIN & ASSOCIATES, INC. ©2010
Drawing Name: G:\Users\11912-00-Grundy-County-Greer-Road-Culvert\CAD\005-GEN-PLAN.dwg Last Modified: May 03, 2016 – 9:07am Plotted on: May 03, 2016 – 9:41am by nancjv

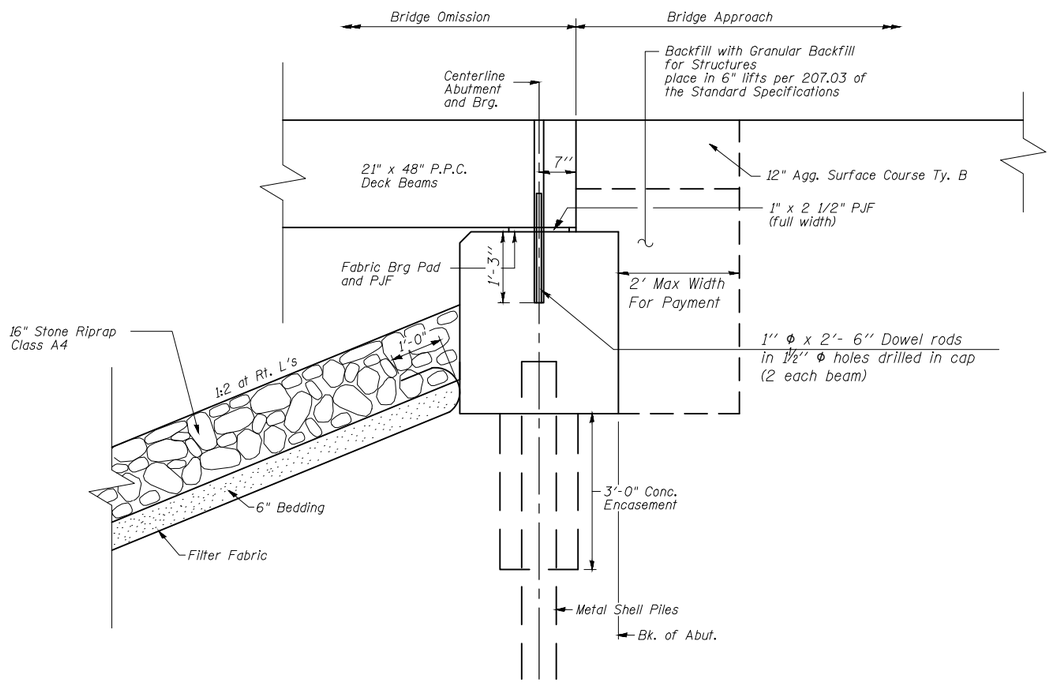

SECTION THRU ABUTMENT

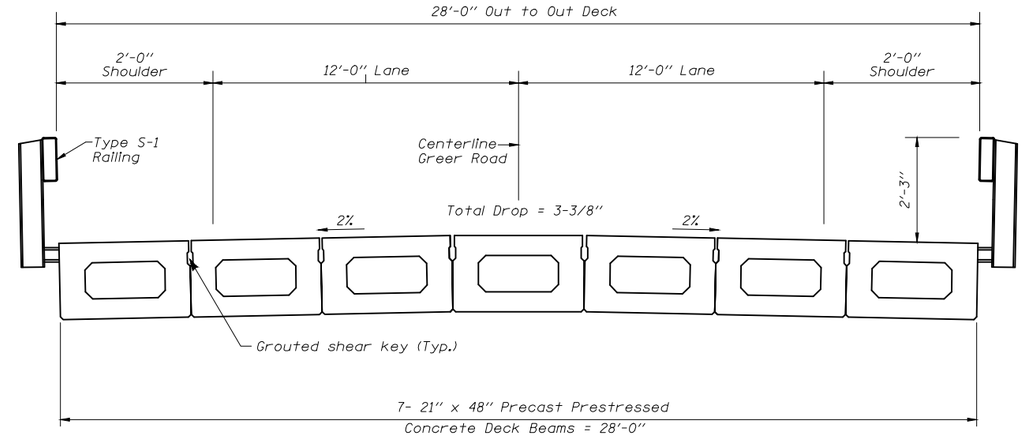

CROSS SECTION

Notes:

After beams have been erected, holes shall be drilled into substructure and anchor dowels placed. Dowel holes shall be filled with non-shrink grout to top of beam and allowed to cure min. 24 hrs. prior to grouting the shear keys.

All horizontal dimensions are at right angles to beam ends.

See sheets 4 & 6 of 17 for bearing pad details.

Dimensions are at Rt L's to centerline Pier and Abutment.

CHAMLIN & ASSOCIATES, INC. ©2010
Drawing Name: Q:\Users\1\11912-00-Grundy-County-Greer-Road-Culvert\CAD\006-SUPER-DET.dwg Last Modified: May 03, 2016 - 9:14am Plotted on: May 03, 2016 - 9:41am by nanciv

DRAWN BY: ARR	REVISIONS			
CHECKED BY: JKC	LEVEL	BY	DATE	DESCRIPTION
DATE: 04/16				

CHAMLIN & ASSOCIATES

PERU MORRIS ILLINOIS

GREER ROAD OVER BILL'S RUN
SECTION 10-14111-00-BR
NORMAN TOWNSHIP
GRUNDY COUNTY

SUBSTRUCTURE AND SUPERSTRUCTURE DETAILS

CONSTRUCTION PLANS

CURRENT AS OF: 05/03/2016

SCALE: AS NOTED

SHEET 6 OF 17

FILE NO.: 11912.00 Y-1

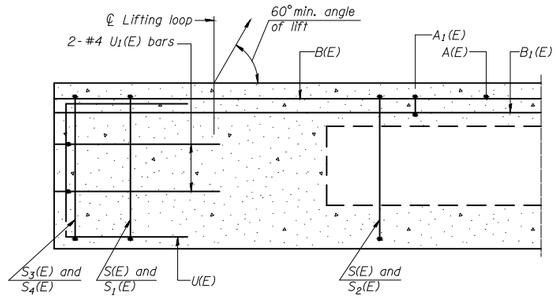

SECTION A-A

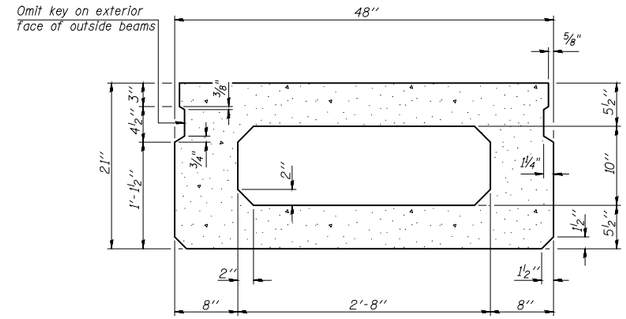

SECTION B-B
(Showing dimensions)

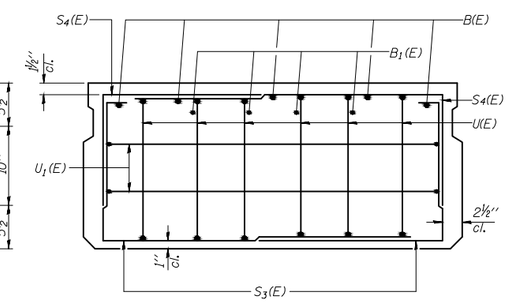

VIEW C-C

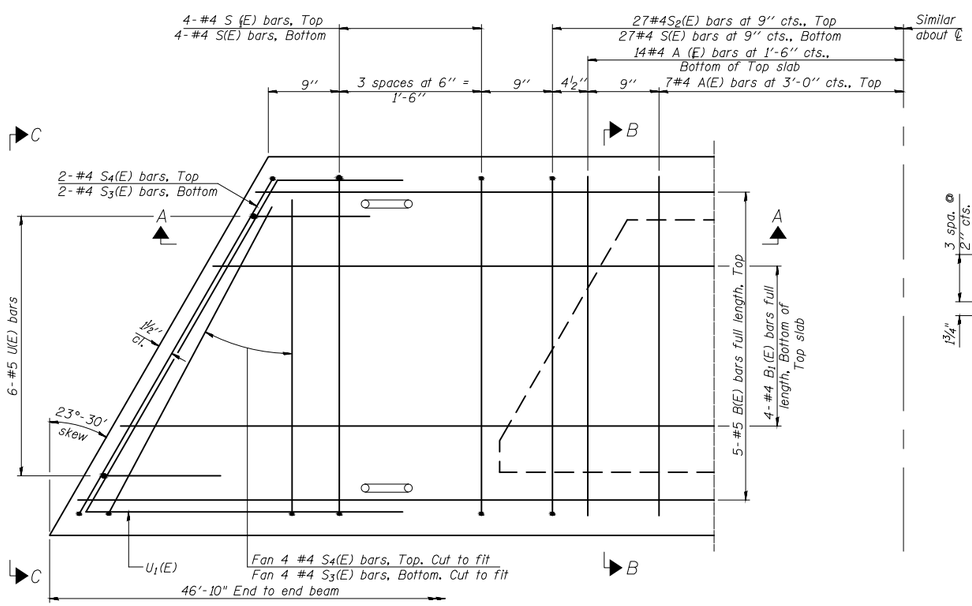

PLAN VIEW

Note: Spacing of S(E) and S_2(E) bars may be adjusted up to 4" in the immediate area of the transverse tie diaphragms to miss the block outs for the transverse ties.

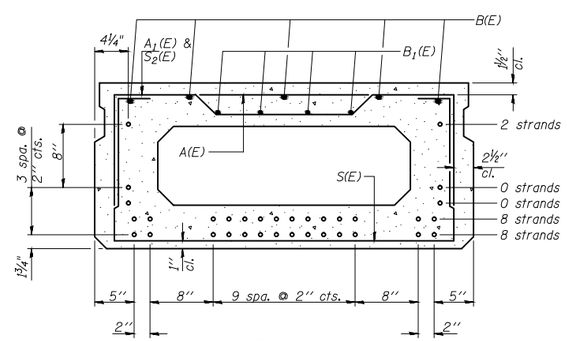

SECTION B-B
(Showing reinforcement and permissible strand locations)

Note: Place the number of strands specified in each row symmetrically about the centerline of beam in the permissible strand locations shown.

BAR LIST
ONE BEAM ONLY
(For information only)

Bar	No.	Size	Length	Shape
A(E)	14	#4	3'-7"	—
A_1(E)	27	#4	3'-10"	~
B(E)	10	#5	24'-6"	—
B_1(E)	8	#4	24'-3"	—
S(E)	62	#4	7'-5"	⊔
S_1(E)	8	#4	5'-11"	⊓
S_2(E)	54	#4	6'-2"	⊓
S_3(E)	12	#4	4'-10 1/2"	⊔
S_4(E)	12	#4	4'-1 1/2"	⊔
U(E)	12	#5	4'-0"	⊏
U_1(E)	4	#4	7'-11"	⊿

Note: See sheet 8 of 17 for additional details and Bill of Material.

MINIMUM BAR LAP
#4 bar = 1'-11"
#5 bar = 2'-6"

CHAMLIN & ASSOCIATES, INC. ©2010
Drawing Name: G:\Users\11912-00-Grundy-County-Greer-Road-Culvert\CAD\007-008-DECK-BEAM-DET.dwg Last Modified: May 03, 2016 - 9:16am Plotted on: May 03, 2016 - 9:43am by nancyv

DRAWN BY: ARR	REVISIONS			
CHECKED BY: JKC	LEVEL	BY	DATE	DESCRIPTION
DATE: 04/16				

CHAMLIN & ASSOCIATES
PERU MORRIS ILLINOIS

GREER ROAD OVER BILL'S RUN
SECTION 10-14111-00-BR
NORMAN TOWNSHIP
GRUNDY COUNTY

21" X 48" PPC
DECK BEAM DETAILS

CONSTRUCTION PLANS

CURRENT AS OF: 05/03/2016
SCALE: AS NOTED
SHEET 7
FILE NO.: 11912.00 Y-1
OF 17

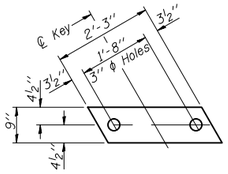

FABRIC BEARING PAD
(Interior)

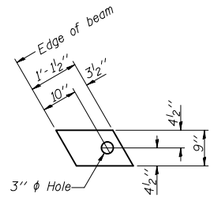

FABRIC BEARING PAD
(Exterior)

FIXED

Notes:
All bearing pads shall be 1" thick.
Omit holes when using expansion bearings.
Expansion bearing pad shall be bonded to the substructure.

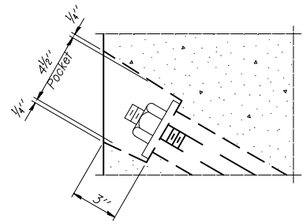

SECTION A-A

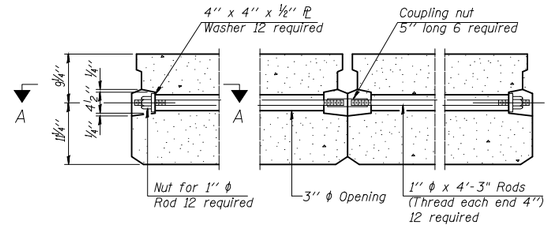

TYPICAL TRANSVERSE TIE ASSEMBLY

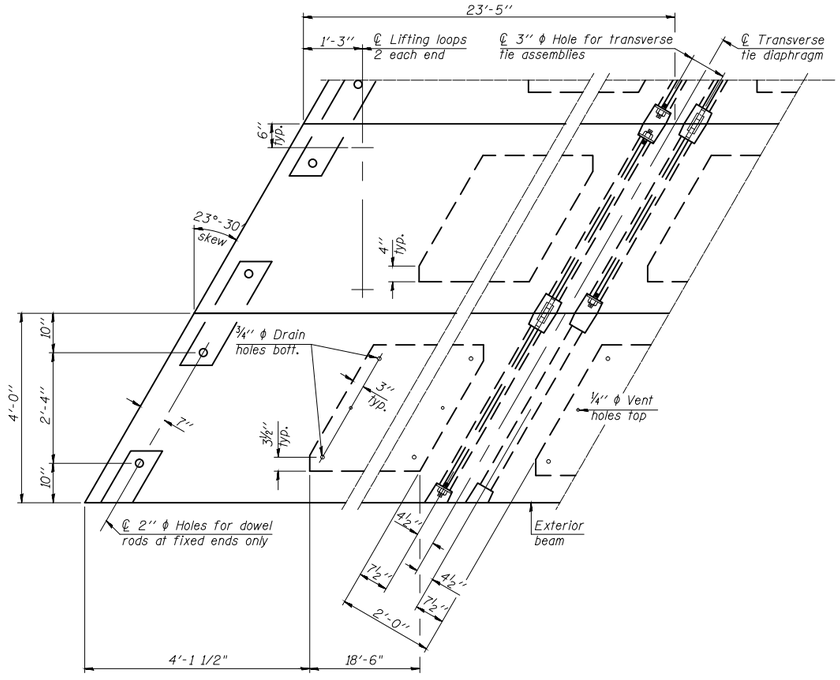

PLAN VIEW

Note: Connect beams in pairs with the transverse tie configuration shown.

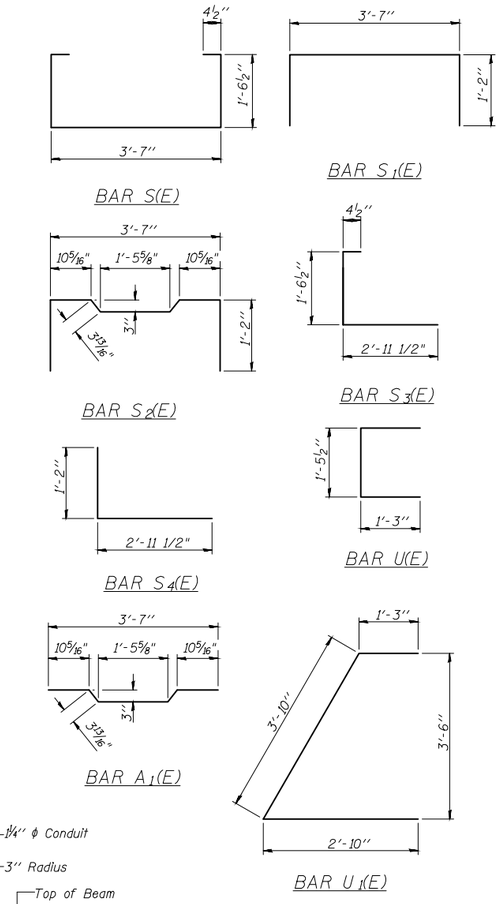

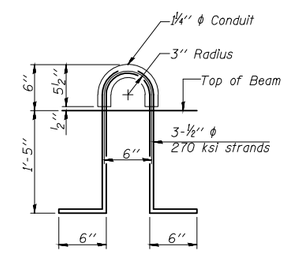

LIFTING LOOP DETAIL

NOTES

Prestressing steel shall be uncoated high strength, low relaxation 7-wire strand, Grade 270. The nominal diameter shall be ½" and the nominal cross-sectional area shall be 0.153 sq. in.

The 1" ϕ rods in the transverse tie assembly shall be tightened to a snug fit and the threads set. Pockets on exterior faces of bridge shall be filled with grout after transverse tie assembly is in place.

Two ⅛" fabric adjusting shims of the dimensions of the exterior bearing pad shall be provided for each bearing pad location.

A minimum 2½" ϕ lifting pin shall be used to engage the lifting loops during handling.

Corrosion Inhibitor, per Article 1020.05(b)(10) and 1021.07 of the Standard Specifications, shall be used in the concrete for precast prestressed concrete deck beams.

Compressive strength of prestressed concrete, f'c, shall be 6000 psi.

Compressive strength of prestressed concrete at release, f'ci, shall be 5000 psi.

BILL OF MATERIAL

Precast Prestressed Conc. Deck Bms. (21" depth)	Sq. Ft.	1311

CHAMLIN & ASSOCIATES, INC. ©2010
Drawing Name: C:\Users\11\11912-00-Grundy-County-Greer-Road-Culvert\CAD\007-008-DECK-BEAM-DET.dwg Last Modified: May 03, 2016 – 9:16am Plotted on: May 03, 2016 – 9:43am by nancyh

DRAWN BY: ARR	REVISIONS		
CHECKED BY: JKC	LEVEL / BY / DATE / DESCRIPTION		
DATE: 04/16			

CHAMLIN & ASSOCIATES — PERU MORRIS ILLINOIS

GREER ROAD OVER BILL'S RUN
SECTION 10-14111-00-BR
NORMAN TOWNSHIP
GRUNDY COUNTY

21" X 48" PPC
DECK BEAM DETAILS

CONSTRUCTION PLANS

CURRENT AS OF: 05/03/2016
SCALE: AS NOTED
SHEET 8
FILE NO.: 11912.00 Y-1
OF 17

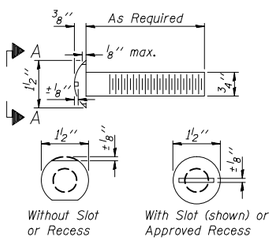

VIEW A-A
ROUND HEAD BOLT

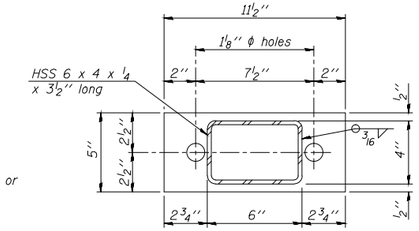

PL 1/2" x 11 1/2" x 5"

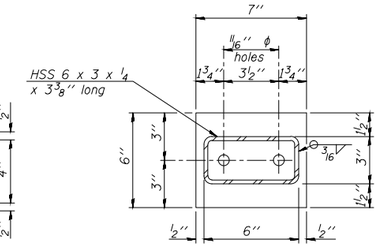

PL 1/2" x 7" x 6"

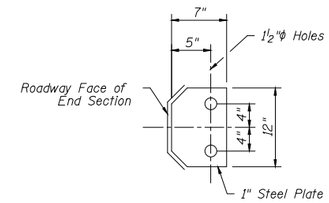

SECTION D-D

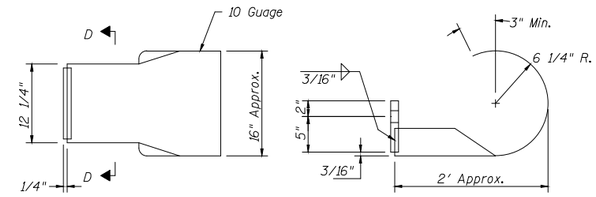

DETAILS OF CURLED END SECTION

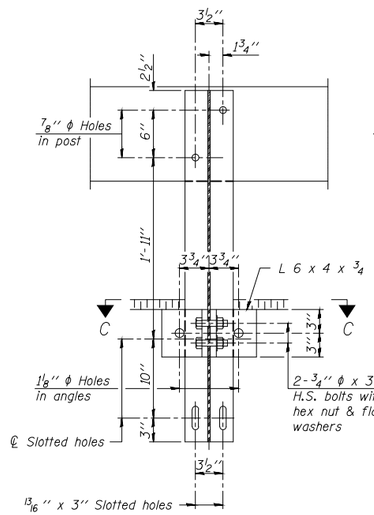

SECTION B-B

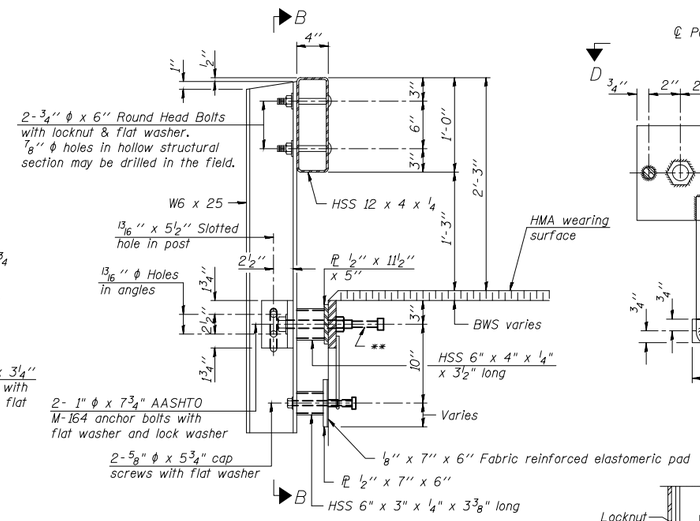

SECTION AT RAILING POST

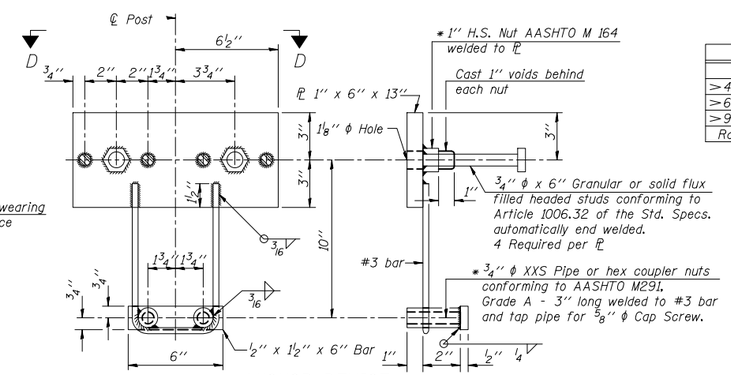

ANCHOR DEVICE
* Threaded areas shall be plugged or blocked off during casting of beam.

SPLICE DIMENSIONS

T	D	A	B	C	E
≤ 4"	2 1/2"	1'-8"	2"	4"	2 1/2"
> 4" ≤ 6 1/2"	3 3/4"	2'-0"	2 1/2"	5 1/2"	3 1/2"
> 6 1/2" ≤ 9"	5"	2'-4"	3 1/2"	6 1/2"	9"
> 9" ≤ 13"	7"	2'-10"	4 1/2"	8 1/2"	11"
Rail Splice	1/4"	1'-8"	2"	4"	——

T = Total movement at expansion joint as shown on the design plans.

Notes:

For multi-span bridges, sufficient 1/4" x 6" x 1'-2" galvanized steel shims shall be provided to align rail between adjacent spans. Cost included with Steel Railing, Type S-1.

All steel rail elements shall be galvanized according to Article 509.05 of the Standard Specifications.

** The studs of the anchor devices shall be placed below the top reinforcement bars and the outermost longitudinal reinforcement bar shall be placed directly above the studs of the rail post anchor device.

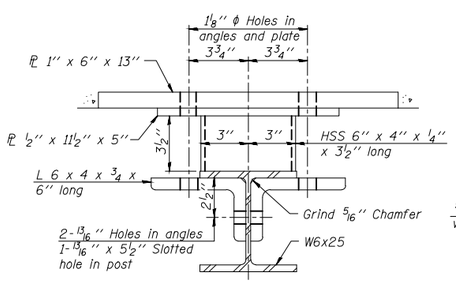

SECTION C-C

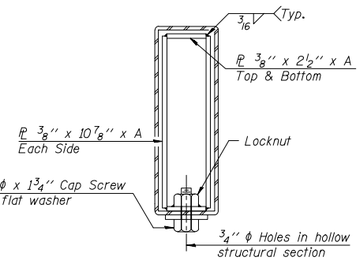

SECTIONS AT RAIL SPLICE

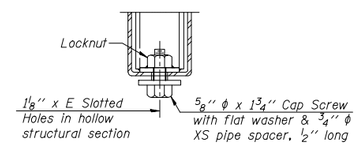

RAIL SPLICE CONNECTION AT EXPANSION JT.

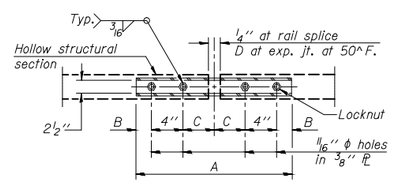

PLAN-BOTT. SPLICE PL TYPICAL

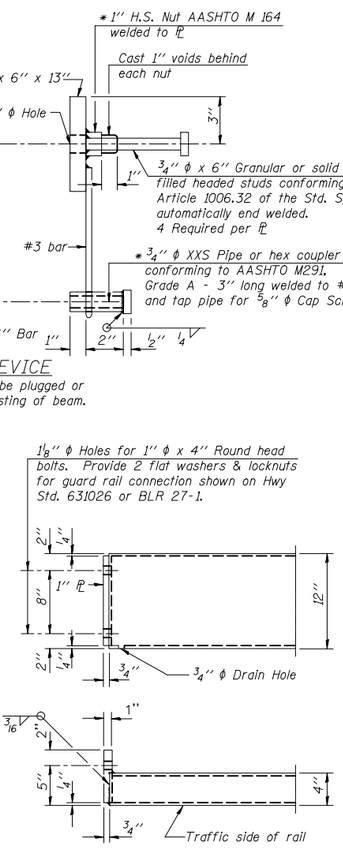

END OF RAIL DETAILS

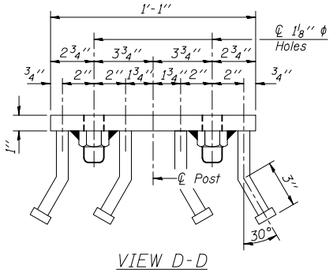

VIEW D-D

BILL OF MATERIAL

Item	Unit	Quantity
Steel Railing, Type S-1	Foot	94

CHAMLIN & ASSOCIATES, INC. ©2010
Drawing Name: G:\Users\11\11912-00-Grundy-County-Greer-Road-Culvert\CAD\009-rail-dets.dwg Last Modified: May 03, 2016 – 9:18am Plotted on: May 03, 2016 – 9:46am by nancir

DRAWN BY: ARR	REVISIONS			
CHECKED BY: JKC	LEVEL	BY	DATE	DESCRIPTION
DATE: 04/16				

CHAMLIN & ASSOCIATES

PERU MORRIS ILLINOIS

GREER ROAD OVER BILL'S RUN
SECTION 10-14111-00-BR
NORMAN TOWNSHIP
GRUNDY COUNTY

STEEL RAILING, TYPE S-1

CONSTRUCTION PLANS

CURRENT AS OF: 05/03/2016

SCALE: AS NOTED

SHEET 9 OF 17

FILE NO.: 11912.00 Y-1

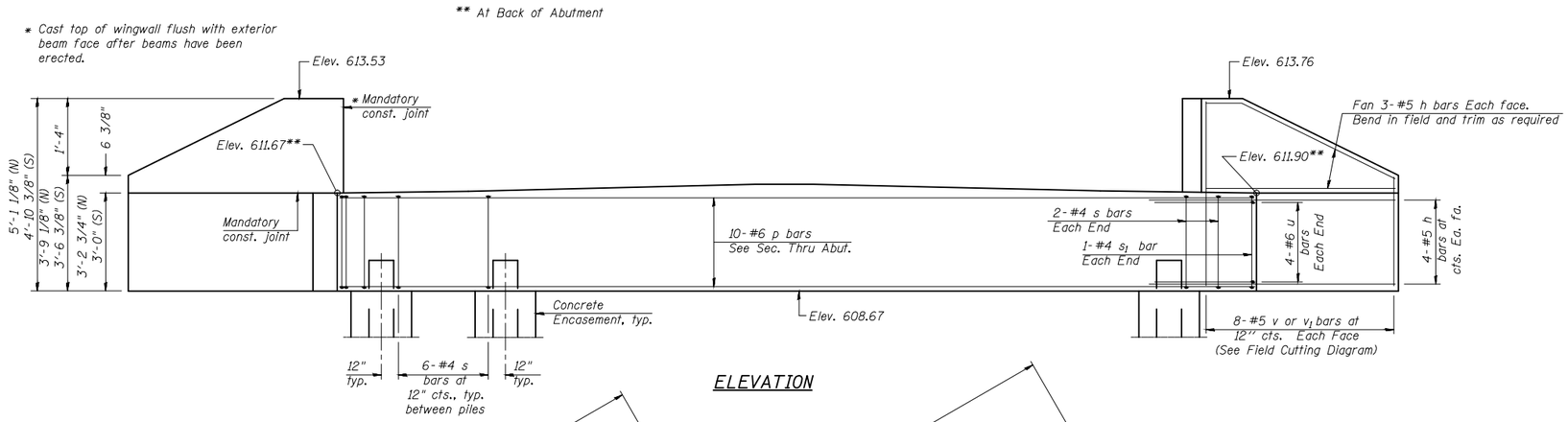

ELEVATION

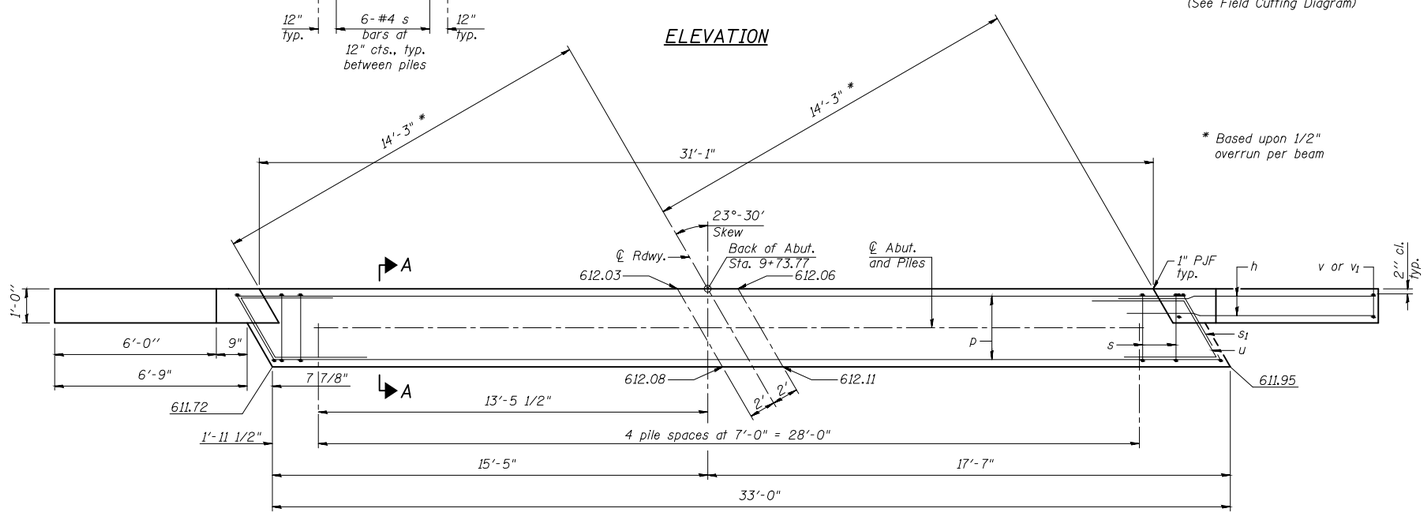

PLAN

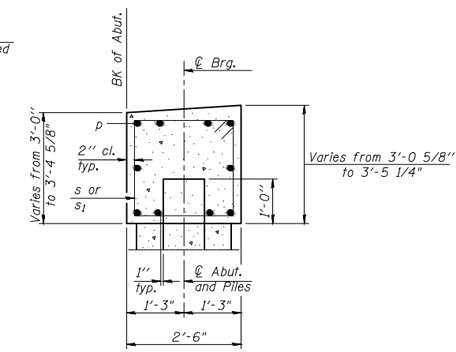

SECTION A-A

(Dimensions are at Rt. L's)

BILL OF MATERIAL

Bar	No.	Size	Length	Shape
h	28	#5	8'-6"	
p	10	#6	32'-8"	
s	28	#4	10'-4"	
s1	2	#4	10'-9"	
u	8	#6	10'-11"	
v	16	#5	7'-9"	
v1	16	#5	8'-3"	
Concrete Structures			Cu. Yd.	12.4
Reinforcement Bars			Pound	1350
Furnishing metal Shell Piles 12" x 0.250"			Foot	145
Driving Piles			Foot	145
Test Pile.			Each	1
Concrete Encasement			Cu. Yd.	2.5
Structure Excavation			Cu. Yd.	46.5

For details of piles and Concrete Encasement, see sheet 12 of 17.

PILE DATA

Type: METAL SHELL
Nominal Required Bearing: 215 kips
Factored Resistance Available: 118 kips
Est. Length: 29'
No. Production Piles: 5
No. Test Piles: 1

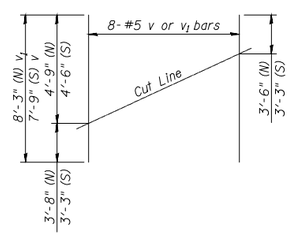

FIELD CUTTING DIAGRAM

Order v or v1 full length. Cut as shown and use remainder of bars in opposite face.

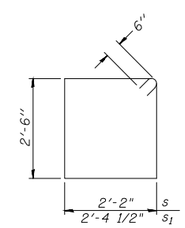

BARS s & s1

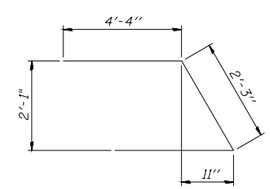

BAR u

DRAWN BY: ARR	REVISIONS			
CHECKED BY: JKC	LEVEL	BY	DATE	DESCRIPTION
DATE: 04/16				

CHAMLIN & ASSOCIATES

PERU MORRIS ILLINOIS

GREER ROAD OVER BILL'S RUN
SECTION 10-14111-00-BR
NORMAN TOWNSHIP
GRUNDY COUNTY

WEST ABUTMENT DETAIL

CONSTRUCTION PLANS

CURRENT AS OF: 05/03/2016

SCALE: AS NOTED | SHEET 10

FILE NO.: 11912.00 Y-1 | OF 17

CHAMLIN & ASSOCIATES, INC. ©2010
Drawing Name: G:\Users\11\11912-00-Grundy-County-Greer-Road-Culvert\CAD\010-011-ABUT-DETS.dwg Last Modified: May 03, 2016 - 9:49am Plotted on: May 03, 2016 - 12:31pm by nanciv

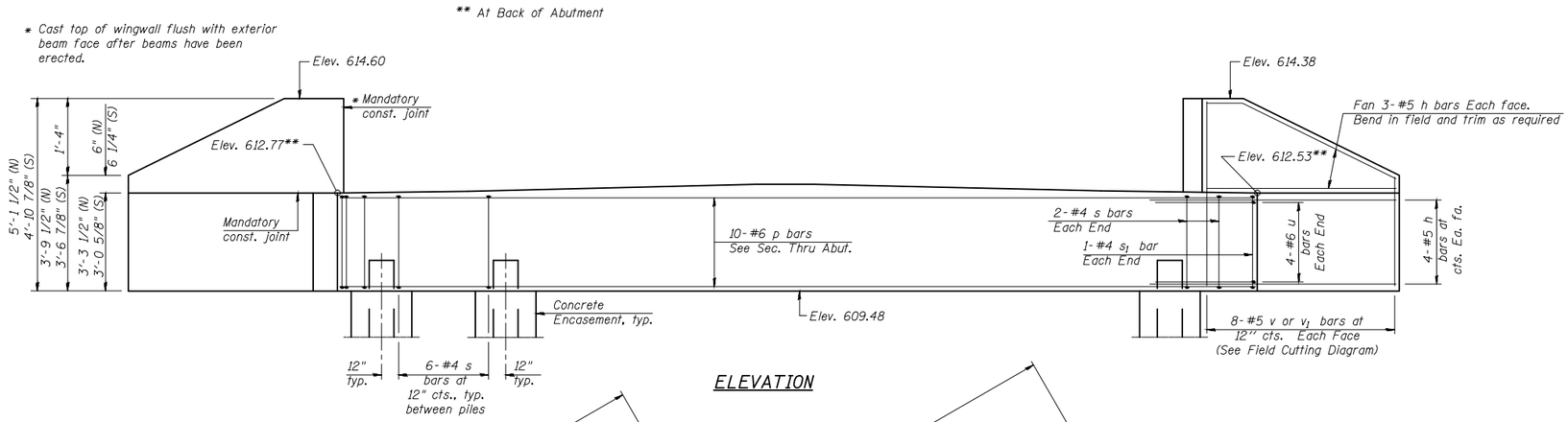

ELEVATION

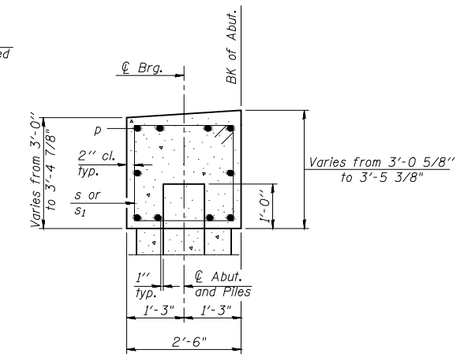

SECTION A-A
(Dimensions are at Rt. L's)

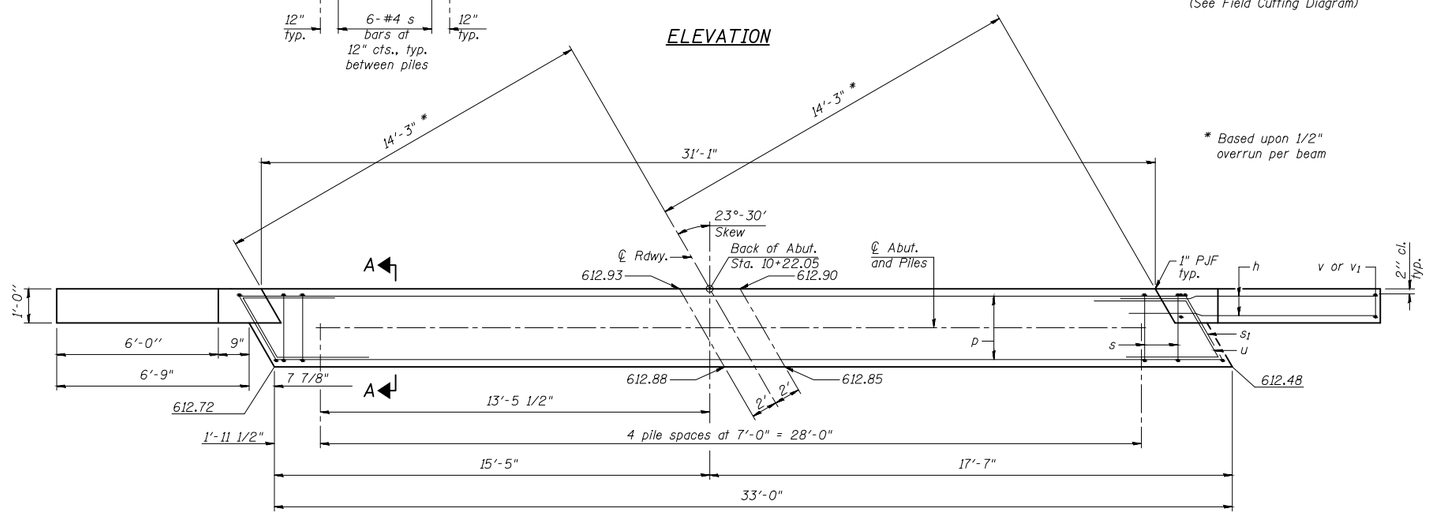

PLAN

BILL OF MATERIAL

Bar	No.	Size	Length	Shape
h	28	#5	8'-6"	
p	10	#6	32'-8"	
s	28	#4	10'-4"	
s1	2	#4	10'-9"	
u	8	#6	10'-11"	
v	16	#5	7'-9"	
v1	16	#5	8'-3"	
Concrete Structures			Cu. Yd.	12.4
Reinforcement Bars			Pound	1350
Furnishing metal Shell Piles 12" x 0.250"			Foot	125
Driving Piles			Foot	125
Test Pile.			Each	1
Concrete Encasement			Cu. Yd.	2.5
Structure Excavation			Cu. Yd.	46.5

For details of piles and Concrete Encasement, see sheet 12 of 17.

PILE DATA

Type: METAL SHELL
Nominal Required Bearing: 215 kips
Factored Resistance Available: 118 kips
Est. Length: 25'
No. Production Piles: 5
No. Test Piles: 1

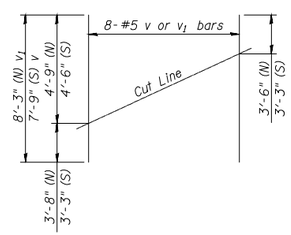

FIELD CUTTING DIAGRAM
Order v or v_1 full length. Cut as shown and use remainder of bars in opposite face.

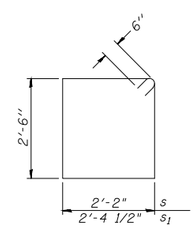

BARS s & s_1

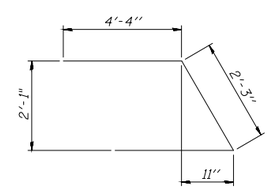

BAR u

CHAMLIN & ASSOCIATES, INC. ©2010
Drawing Name: G:\Users\11\11912-00-Grundy-County-Greer-Road-Culvert\CAD\010-011-ABUT-DETS.dwg Last Modified: May 03, 2016 - 9:21am Plotted on: May 03, 2016 - 9:48am by nancliv

DRAWN BY: ARR	REVISIONS			
CHECKED BY: JKC	LEVEL	BY	DATE	DESCRIPTION
DATE: 04/16				

CHAMLIN & ASSOCIATES — PERU MORRIS ILLINOIS

GREER ROAD OVER BILL'S RUN
SECTION 10-14111-00-BR
NORMAN TOWNSHIP
GRUNDY COUNTY

EAST ABUTMENT DETAIL

CONSTRUCTION PLANS

CURRENT AS OF: 05/03/2016
SCALE: AS NOTED
SHEET 11 OF 17
FILE NO.: 11912.00 Y-1

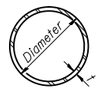

METAL SHELL PILE TABLE

Designation and outside diameter	Wall thickness t	Weight per foot (Lbs./ft.)	Inside volume (yd.^{3}/ft.)
PP12	0.179''	22.60	0.0274
PP12	0.250''	31.37	0.0267
PP14	0.250''	36.71	0.0368
PP14	0.312''	45.61	0.0361

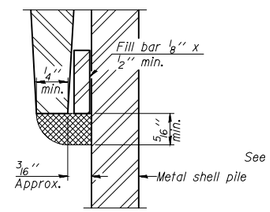

DETAIL A

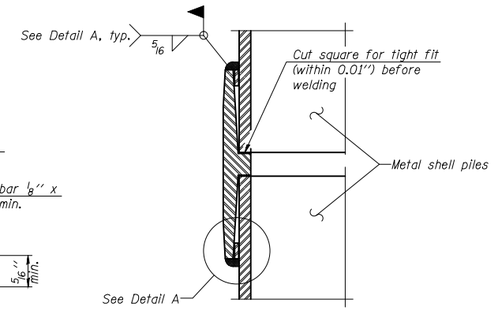

Notes:
The 1/8'' x 1/2'' min. fill bar may be constructed of 2 bars with a 1/8'' max. gap between them.
Pile segments shall be driven to solid contact with splicer before welding.

WELDED COMMERCIAL SPLICE

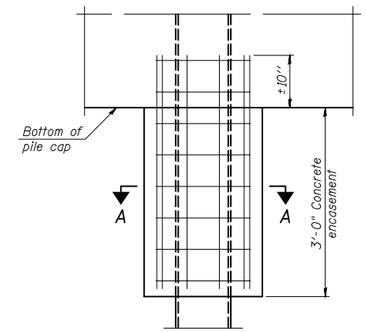

ELEVATION

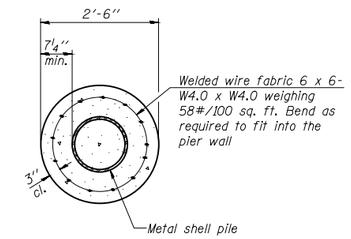

SECTION A-A

Note:
Forms for encasement may be omitted when soil conditions permit.

CONCRETE ENCASEMENT AT PIERS

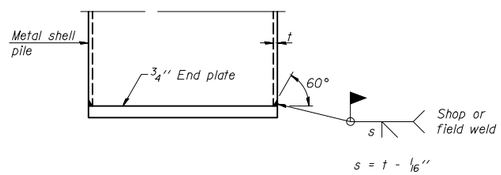

END PLATE ATTACHMENT

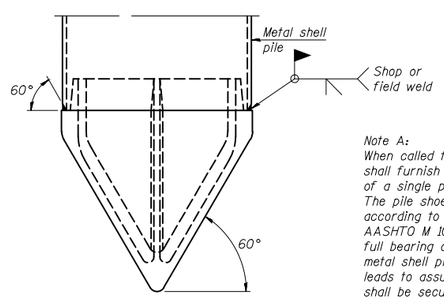

Note A:
When called for on the plans, the Contractor shall furnish metal shell pile shoes consisting of a single piece conical pile point as shown. The pile shoes shall be cast in one piece steel according to either ASTM A 148 Grade 90-60 or AASHTO M 103 Grade 65-35 and shall provide full bearing over the full circumference of the metal shell pile. The pile shoe shall have tapered leads to assure proper alignment and fitting and shall be secured to the pile with a circumferential weld.

METAL SHELL PILE SHOE ATTACHMENT

(See Note A)

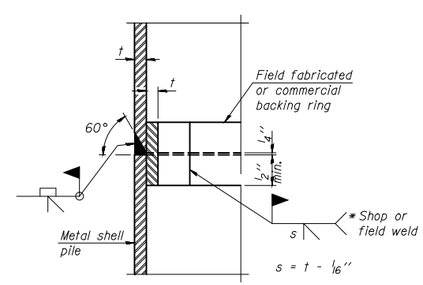

COMPLETE PENETRATION WELD SPLICE

* Field fabricated backing ring may be made from pile shell by removing segment to allow reducing circumference and vertically rejoin with partial joint penetration weld.

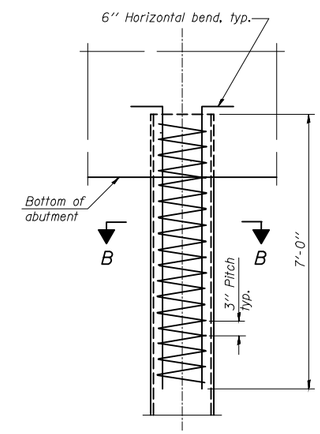

ELEVATION

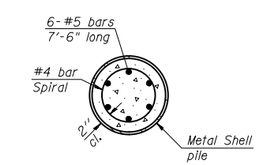

SECTION B-B

METAL SHELL REINFORCEMENT AT ABUTMENTS

Note:
The metal shell piles shall be according to ASTM A 252 Grade 3.

CHAMLIN & ASSOCIATES, INC. © 2010
Drawing Name: G:\Users\11\11912-00-Grundy-County-Greer-Road-Culvert\CAD\012-PILE-DETS.dwg Last Modified: May 03, 2016 - 9:21am Plotted on: May 03, 2016 - 9:50am by nancjv

DRAWN BY: ARR	REVISIONS			
CHECKED BY: JKC	LEVEL	BY	DATE	DESCRIPTION
DATE: 04/16				

CHAMLIN & ASSOCIATES

PERU MORRIS ILLINOIS

GREER ROAD OVER BILL'S RUN
SECTION 10-14111-00-BR
NORMAN TOWNSHIP
GRUNDY COUNTY

METAL SHELL PILE DETAILS

CONSTRUCTION PLANS

CURRENT AS OF: 05/03/2016
SCALE: AS NOTED
SHEET 12
FILE NO.: 11912.00 Y-1
OF 17

Midwest Testing Services, Inc.
3705 Progress Blvd.
Peru, IL 61354
Phone: 815-223-6696
Fax: 815-223-6659
e-mail: mts37@comcast.net

BORING LOG

Sheet 1 of 3

Client: Chamlin & Associates, Inc.
Project Name: Greer Road 3 Span Bridge
Project Site: Grundy County, Illinois

Boring No. B-1
Surface Elev. *100.30*
Auger Depth 61'
Rotary Depth NA
Start Date 07/03/10
Finish Date 07/03/10

Location: 6' North of centerline of roadway and 25' east of centerline of culvert

DRILLED BY: Randy Safranski, Diedrich D-120

(DEPTH) *ELEV.	DESCRIPTION OF MATERIALS	Depth in feet	Sample No.	Sample Type	Qu (TSF)	N Value (Blows)	Bulge / Shear	Moisture (%)	Dry Density (PCF)	REMARKS
100.30										
99.30	Stiff Brown Gravely Loam (Fill)	1								
98.30		2								
97.30		3	1	SS	1.7	14	S	16		
96.30		4								
95.30	Stiff Black Clay	5								
94.30		6	2	SS	1.1	6	B	24		
93.30		7								
92.30	Very Stiff Brownish Gray Clay Till	8	3	SS	2.0	12	B	18		
91.30		9								
90.30		10								
89.30	Very Stiff To Hard Gray Clay Till	11	4	SS	4.8	23	B	15		
88.30		12								
87.30		13	5	SS	4.1	19	B	16		
86.30		14								
85.30		15								
84.30		16	6	SS	3.5	17	B	16		
83.30		17								
82.30		18	7	SS	3.8	18	B	15		
81.30		19								
80.30		20	8	SS	4.4	21	B	15		

Groundwater Data: Static water level after auger removal - elevation 82.0.
Comments: ***Assumed center of roadway at centerline of culvert = elevation 100.0.***

Midwest Testing Services, Inc.
3705 Progress Blvd.
Peru, IL 61354
Phone: 815-223-6696
Fax: 815-223-6659
e-mail: mts37@comcast.net

BORING LOG

Sheet 2 of 3

Client: Chamlin & Associates, Inc.
Project Name: Greer Road 3 Span Bridge
Project Site: Grundy County, Illinois
0

Boring No. B-1
Surface Elev. *100.30*
Auger Depth 61'
Rotary Depth NA
Start Date 07/03/10
Finish Date 07/03/10

Location: 6' North of centerline of roadway and 25' east of centerline of culvert

DRILLED BY: Randy Safranski, Diedrich D-120

(DEPTH) ELEV.	DESCRIPTION OF MATERIALS	Depth in feet	Sample No.	Sample Type	Qu (TSF)	N Value (Blows)	Bulge / Shear	Moisture (%)	Dry Density (PCF)	REMARKS
79.30		22								
78.30		23	9	SS	4.6	26	B	14		
77.30	Hard Gray Clay Till	24								
76.30		25								
75.30		26	10	SS	4.5	26	S	14		
74.30		27								
73.30		28								
72.30	Stiff Gray Clay	29								
71.30		30								
70.30		31	11	SS	1.9	11	B	20		
69.30		32								
68.30		33								
67.30		34								
66.30		35								
65.30		36	12	SS	1.7	10	B	22		
64.30		37								
63.30		38								
62.30		39								
61.30	Medium Gray Fine Sand	40								
60.30		41	13	SS	---	18	---	---		
59.30										

Groundwater Data: Static water level after auger removal - elevation 82.0.
Comments: ***Assumed center of roadway at centerline of culvert = elevation 100.0.***

Midwest Testing Services, Inc.
3705 Progress Blvd.
Peru, IL 61354
Phone: 815-223-6696
Fax: 815-223-6659
e-mail: mts37@comcast.net

BORING LOG

Sheet 3 of 3

Client: Chamlin & Associates, Inc.
Project Name: Greer Road 3 Span Bridge
Project Site: Grundy County, Illinois

Boring No. B-1
Surface Elev. *100.30*
Auger Depth 61'
Rotary Depth NA
Start Date 07/03/10
Finish Date 07/03/10

Location: 6' North of centerline of roadway and 25' east of centerline of culvert

DRILLED BY: Randy Safranski, Diedrich D-120

(DEPTH) ELEV.	DESCRIPTION OF MATERIALS	Depth in feet	Sample No.	Sample Type	Qu (TSF)	N Value (Blows)	Bulge / Shear	Moisture (%)	Dry Density (PCF)	REMARKS
58.30		43								
57.30		44								
56.30		45								
55.30		46	14	SS	---	23	---	---		
54.30	Medium Gray Fine Sand With Silt Seams	47								
53.30		48								
52.30		49								
51.30		50								
50.30		51	15	SS	---	29	---	---		
49.30		52								
48.30		53								
47.30		54								
46.30		55								
45.30		56	16	SS	4.9	37	S	11		
44.30	Hard Gray Silty Loam Till	57								
43.30		58								
42.30		59								
41.30		60								
40.30		61	17	SS	5.3	41	S	10		
39.30	Bottom of Boring	62								
38.30										

Groundwater Data: Static water level after auger removal - elevation 82.0.
Comments: ***Assumed center of roadway at centerline of culvert = elevation 100.0.***

NOTE: THE ACTUAL SURFACE ELEVATION 614.81 FOR B-1 LOCATION.

CHAMLIN & ASSOCIATES, INC. ©2010
Drawing Name: G:\Users\11912-00-Grundy-County-Greer-Road-Culvert\CAD\013-014-SOIL-BORINGS.dwg Last Modified: May 03, 2016 - 9:22am Plotted on: May 03, 2016 - 9:54am by nancjv

DRAWN BY: ARR
CHECKED BY: JKC
DATE: 04/16

REVISIONS			
LEVEL	BY	DATE	DESCRIPTION

CHAMLIN & ASSOCIATES

PERU MORRIS
ILLINOIS

GREER ROAD OVER BILL'S RUN
SECTION 10-14111-00-BR
NORMAN TOWNSHIP
GRUNDY COUNTY

SOIL BORINGS

CONSTRUCTION PLANS

CURRENT AS OF: 05/03/2016
SCALE: AS NOTED
SHEET 13
FILE NO.: 11912.00 Y-1
OF 17

Midwest Testing Services, Inc.
3705 Progress Blvd.
Peru, IL 61354

Phone: 815-223-6696
Fax: 815-223-6659
e-mail: mts37@comcast.net

BORING LOG

Sheet 1 of 3

Client: Chamlin & Associates, Inc.
Project Name: Greer Road 3 Span Bridge
Project Site: Grundy County, Illinois

Boring No. B-2
Surface Elev. *99.40*
Auger Depth 61' Rotary Depth NA
Start Date 07/03/10 Finish Date 07/03/10

Location: 6' South of centerline of roadway and 25' west of centerline of culvert

DRILLED BY: Randy Safranski, Diedrich D-120

(DEPTH) *ELEV. 99.40	DESCRIPTION OF MATERIALS	Depth in feet	Sample No.	Sample Type	Qu (TSF)	N Value (Blows)	Bulge / Shear	Moisture (%)	Dry Density (PCF)	REMARKS
98.40	Stiff Brown Silty Clay (Fill)	1								
97.40		2								
96.40		3	1	SS	1.8	11	B	20		
95.40		4								
94.40		5	2	SS	1.3	7	B	22		
93.40	Stiff Black Clay	6								
92.40		7								
91.40	Very Stiff Brownish Gray To Gray Clay Till	8	3	SS	2.1	11	B	20		
90.40		9								
89.40		10	4	SS	2.3	14	B	19		
88.40		11								
87.40		12								
86.40		13	5	SS	3.6	18	B	16		
85.40		14								
84.40		15	6	SS	3.4	16	B	16		
83.40		16								
82.40		17								
81.40	Hard Gray Clay Till	18	7	SS	4.0	19	B	15		
80.40		19								
79.40		20	8	SS	4.3	26	B	14		

Groundwater Data: Static water level after auger removal - elevation 82.0.
Comments: *Assumed center of roadway at centerline of culvert = elevation 100.0.*

Midwest Testing Services, Inc.
3705 Progress Blvd.
Peru, IL 61354

Phone: 815-223-6696
Fax: 815-223-6659
e-mail: mts37@comcast.net

BORING LOG

Sheet 2 of 3

Client: Chamlin & Associates, Inc.
Project Name: Greer Road 3 Span Bridge
Project Site: Grundy County, Illinois

Boring No. B-2
Surface Elev. *99.40*
Auger Depth 61' Rotary Depth NA
Start Date 07/03/10 Finish Date 07/03/10

Location: 6' South of centerline of roadway and 25' west of centerline of culvert

DRILLED BY: Randy Safranski, Diedrich D-120

(DEPTH) ELEV. 78.40	DESCRIPTION OF MATERIALS	Depth in feet	Sample No.	Sample Type	Qu (TSF)	N Value (Blows)	Bulge / Shear	Moisture (%)	Dry Density (PCF)	REMARKS
77.40	Very Stiff Gray Clay Till	22								
76.40		23	9	SS	3.1	18	B	16		
75.40		24								
74.40		25	10	SS	1.6	14	B	18		
73.40		26								
72.40		27								
71.40		28								
70.40		29								
69.40	Stiff To Very Stiff Gray Clay	30								
68.40		31	11	SS	1.9	13	---	----		
67.40		32								
66.40		33								
65.40		34								
64.40		35								
63.40		36	12	SS	2.1	14	B	17		
62.40		37								
61.40		38								
60.40	Medium Gray Fine Sand	39								
59.40		40								
58.40		41	13	SS	----	22	---	---		

Groundwater Data: Static water level after auger removal - elevation 82.0.
Comments: *Assumed center of roadway at centerline of culvert = elevation 100.0.*

Midwest Testing Services, Inc.
3705 Progress Blvd.
Peru, IL 61354

Phone: 815-223-6696
Fax: 815-223-6659
e-mail: mts37@comcast.net

BORING LOG

Sheet 3 of 3

Client: Chamlin & Associates, Inc.
Project Name: Greer Road 3 Span Bridge
Project Site: Grundy County, Illinois

Boring No. B-2
Surface Elev. *99.40*
Auger Depth 61' Rotary Depth NA
Start Date 07/03/10 Finish Date 07/03/10

Location: 6' South of centerline of roadway and 25' west of centerline of culvert

DRILLED BY: Randy Safranski, Diedrich D-120

(DEPTH) ELEV. 57.40	DESCRIPTION OF MATERIALS	Depth in feet	Sample No.	Sample Type	Qu (TSF)	N Value (Blows)	Bulge / Shear	Moisture (%)	Dry Density (PCF)	REMARKS
56.40	Medium Gray Fin Sand With Silt Seams	43								
55.40		44								
54.40		45								
53.40		46	14	SS	---	24	---	---		
52.40		47								
51.40	Dense Gray Sand - Silt Clay Seams	48								
50.40		49								
49.40		50								
48.40		51	15	SS	---	38	---	---		
47.40	Hard Gray Silty Loam Till	52								
46.40		53								
45.40		54								
44.40		55								
43.40		56	16	SS	5.1	41	S.	11		
42.40		57								
41.40		58								
40.40		59								
39.40		60								
38.40		61	17	SS	4.9	44	S	11		
37.40	Bottom of Boring	62								

Groundwater Data: Static water level after auger removal - elevation 82.0.
Comments: *Assumed center of roadway at centerline of culvert = elevation 100.0.*

NOTE: THE ACTUAL SURFACE ELEVATION 613.91 FOR B-2 LOCATION.

CHAMLIN & ASSOCIATES, INC. © 2010
Drawing Name: C:\Users\11\11912-00-Grundy-County-Greer-Road-Culvert\CAD\013-014-SOIL-BORINGS.dwg Last Modified: May 03, 2016 - 9:22am Plotted on: May 03, 2016 - 9:54am by nancy

DRAWN BY: ARR	REVISIONS		
CHECKED BY: JKC	LEVEL / BY / DATE / DESCRIPTION		
DATE: 04/16			

CHAMLIN & ASSOCIATES

PERU MORRIS ILLINOIS

GREER ROAD OVER BILL'S RUN
SECTION 10-14111-00-BR
NORMAN TOWNSHIP
GRUNDY COUNTY

SOIL BORINGS

CONSTRUCTION PLANS

CURRENT AS OF: 05/03/2016
SCALE: AS NOTED
SHEET 14
FILE NO.: 11912.00 Y-1
OF 17

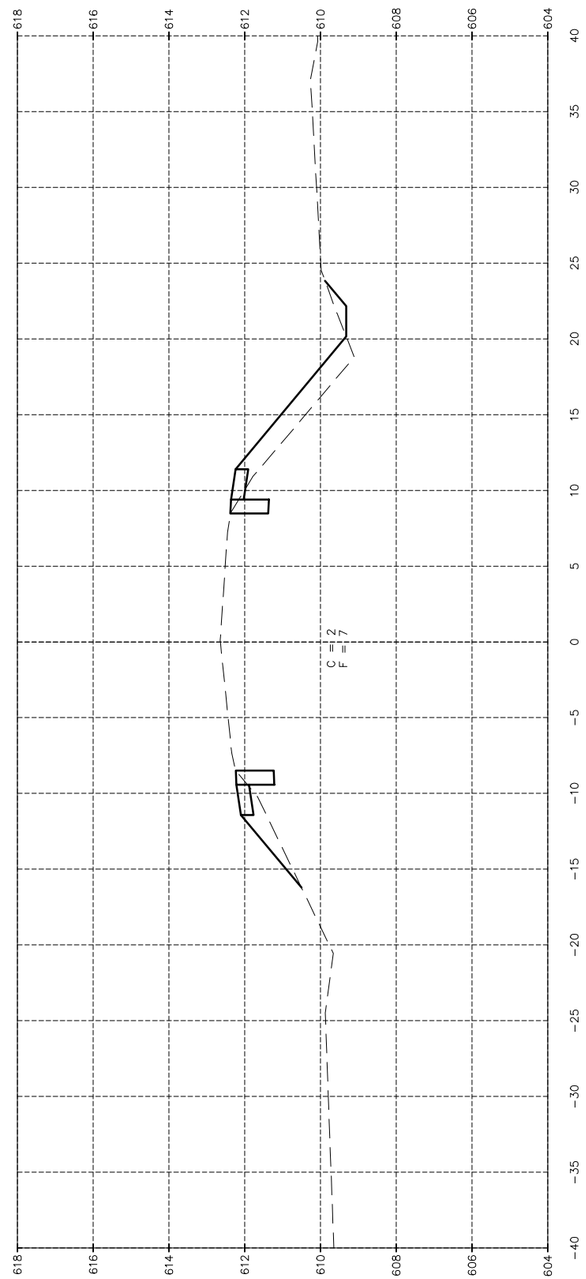

9+00.00

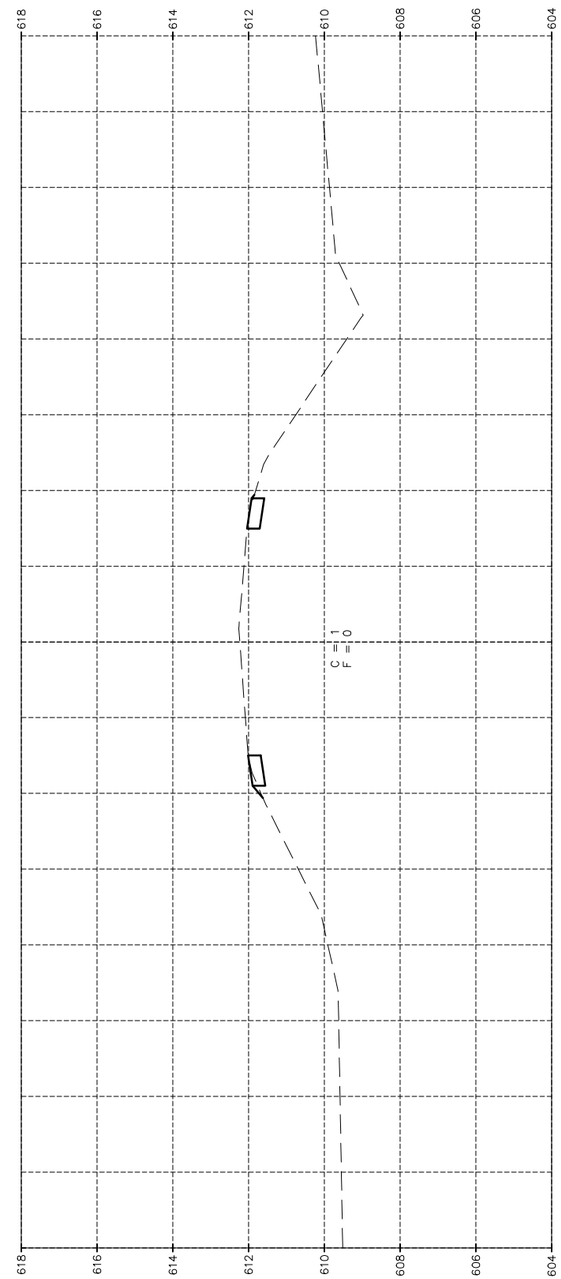

8+50.00

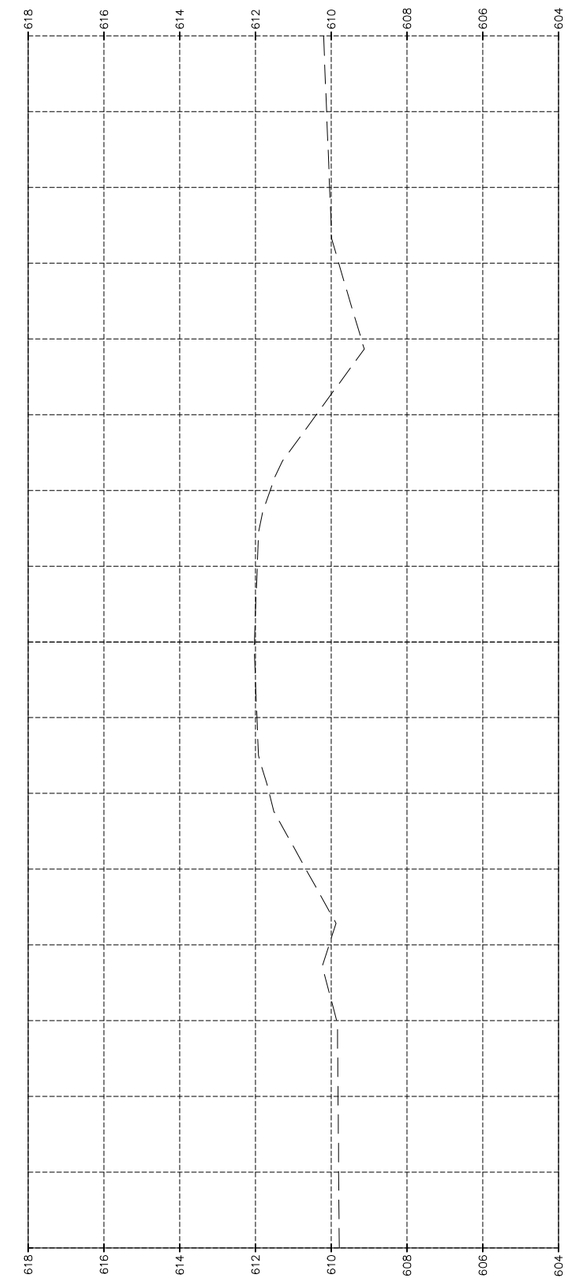

8+00.00

CHAMLIN & ASSOCIATES, INC. ©2011
Drawing Name: G:\Users\11\11912-00-Grundy-County-Greer-Road-Culvert\CAD\ETOPO-05-03-10.dwg Last Modified: Apr 28, 2016 - 9:53am Plotted on: May 03, 2016 - 9:25am by nancy

DRAWN BY: ARR	REVISIONS			
CHECKED BY: JKC	LEVEL	BY	DATE	DESCRIPTION
DATE: 04/16				

CHAMLIN & ASSOCIATES

PERU MORRIS
ILLINOIS

GREER ROAD OVER BILL'S RUN
SECTION 10-14111-00-BR
NORMAN TOWNSHIP
GRUNDY COUNTY

CROSS SECTIONS

CONSTRUCTION PLANS

CURRENT AS OF: 05/03/2016
SCALE: AS NOTED
SHEET 15
FILE NO.: 11912.00 Y-
OF 17

CHAMLIN & ASSOCIATES, INC. © 2011
Drawing Name: G:\Users\11\11912-00-Grundy-County-Greer-Road-Culvert\CAD\ETOPO-05-03-10.dwg Last Modified: Apr 28, 2016 - 9:53am Plotted on: May 03, 2016 - 9:25am by nanciv

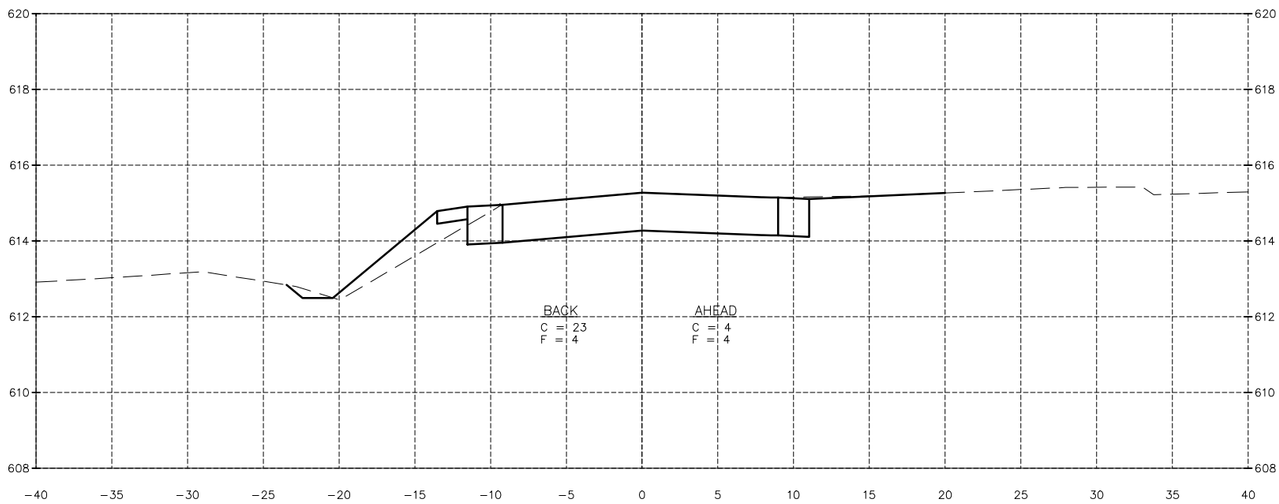

10+50.00

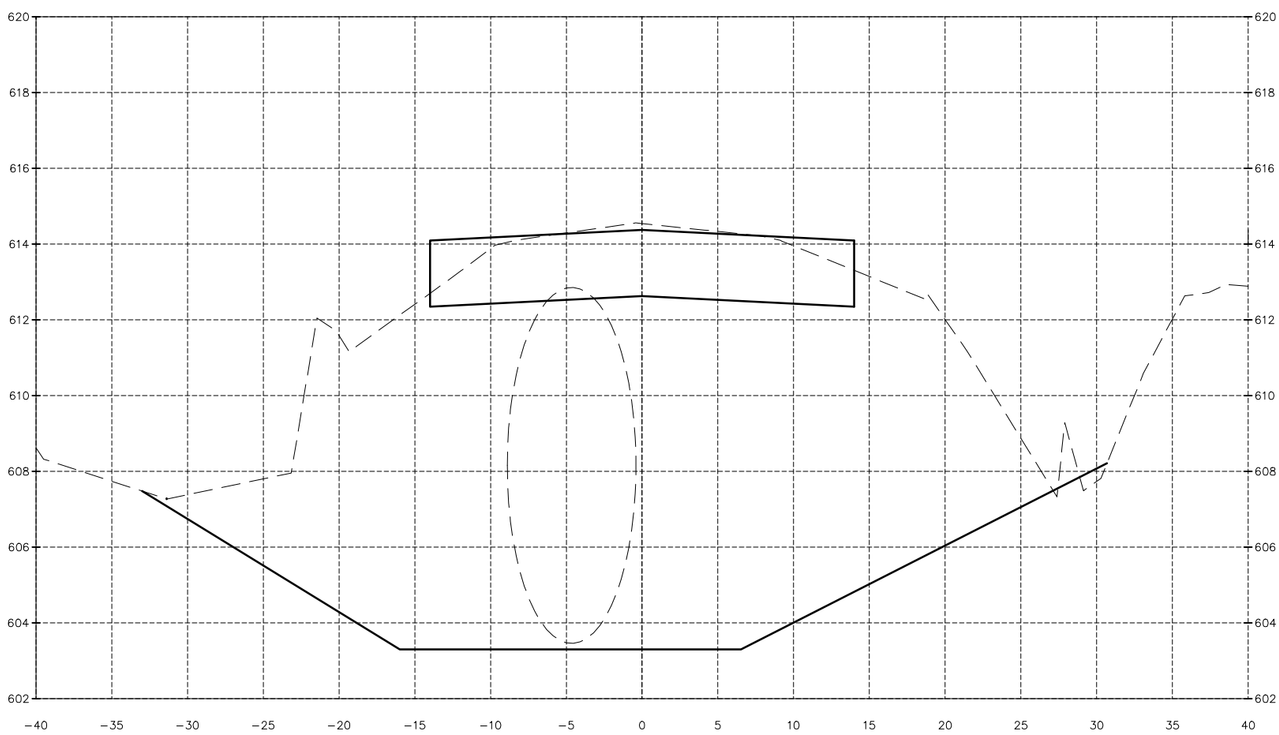

10+00.00

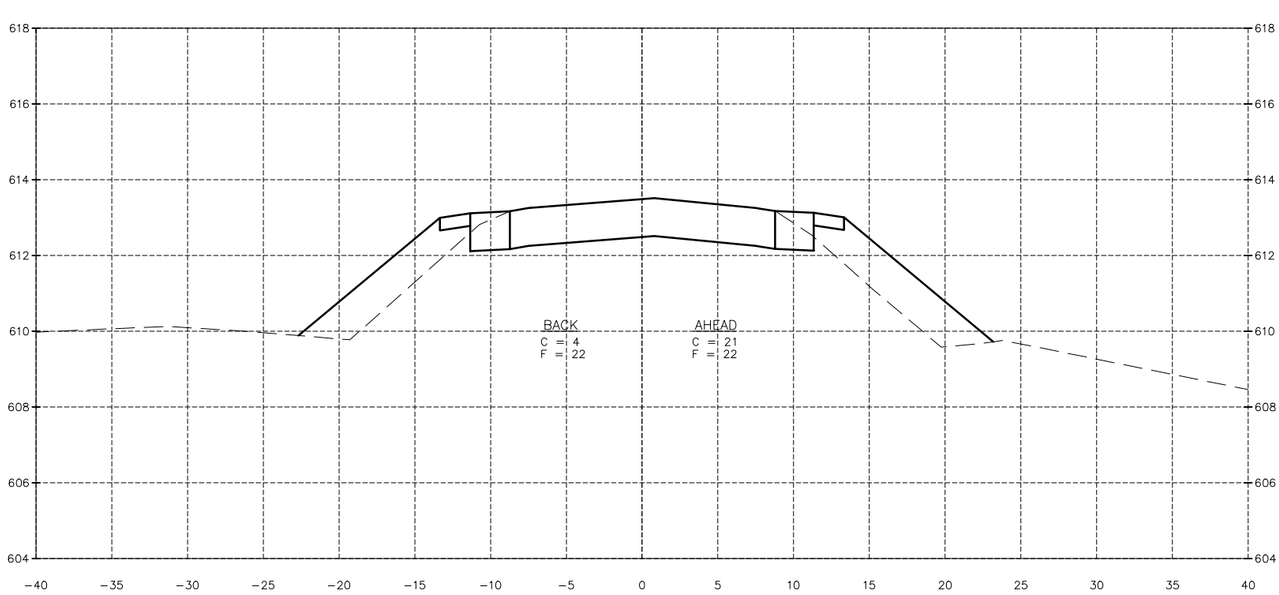

9+50.00

DRAWN BY: ARR
CHECKED BY: JKC
DATE: 04/16

LEVEL	BY	DATE	REVISIONS DESCRIPTION

CHAMLIN & ASSOCIATES
PERU ILLINOIS
MORRIS

GREER ROAD OVER BILL'S RUN
SECTION 10-14111-00-BR
NORMAN TOWNSHIP
GRUNDY COUNTY

CROSS SECTIONS

CONSTRUCTION PLANS

CURRENT AS OF: 05/03/2016
SCALE: AS NOTED
FILE NO.: 11912.00 Y-
SHEET 16 OF 17

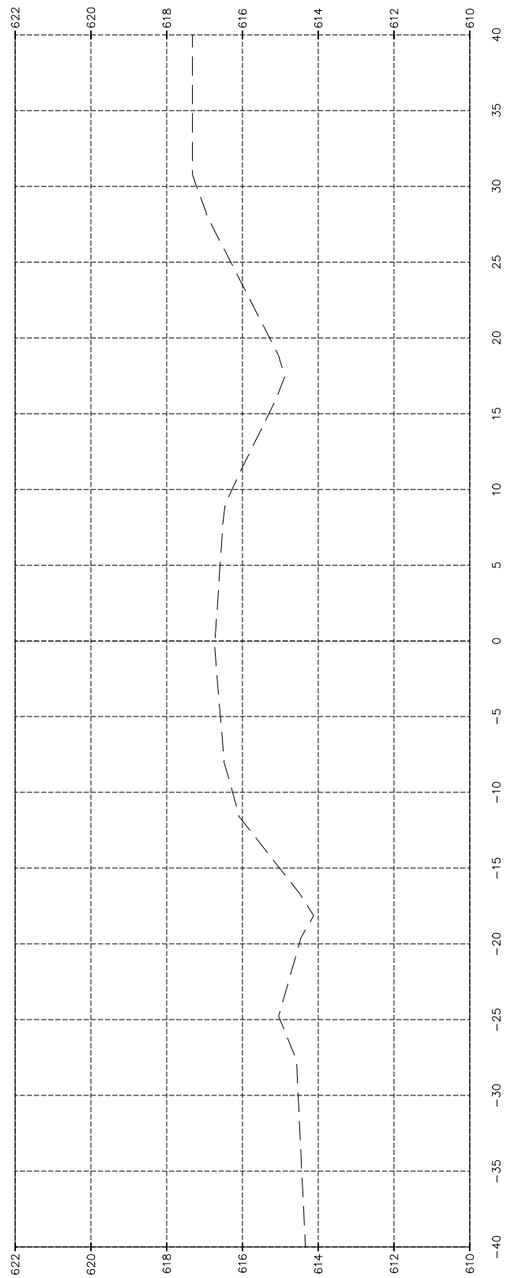

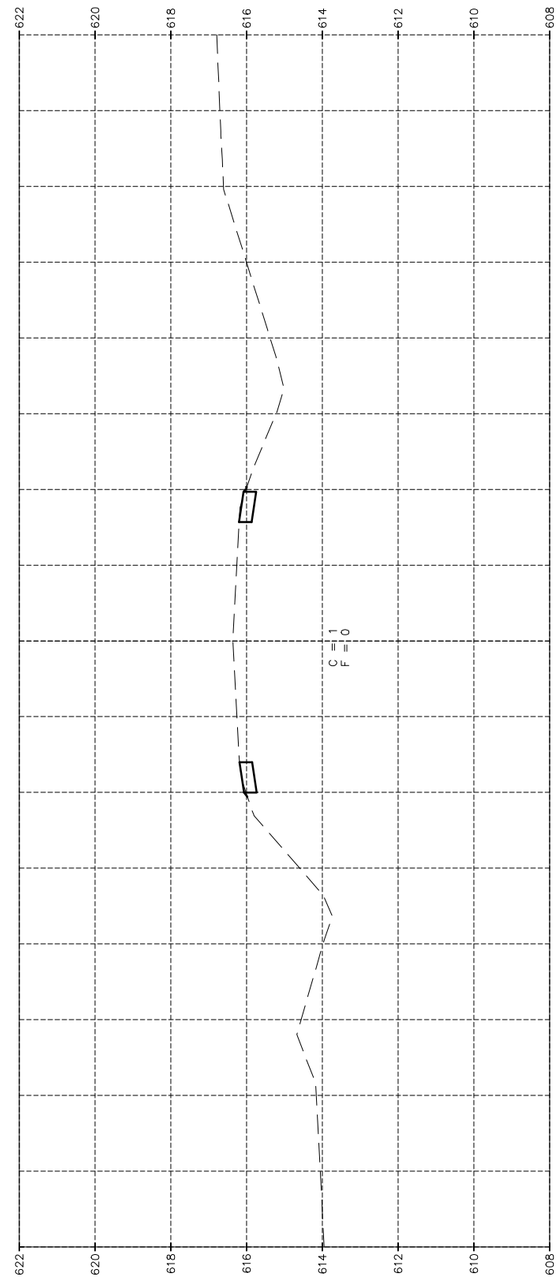

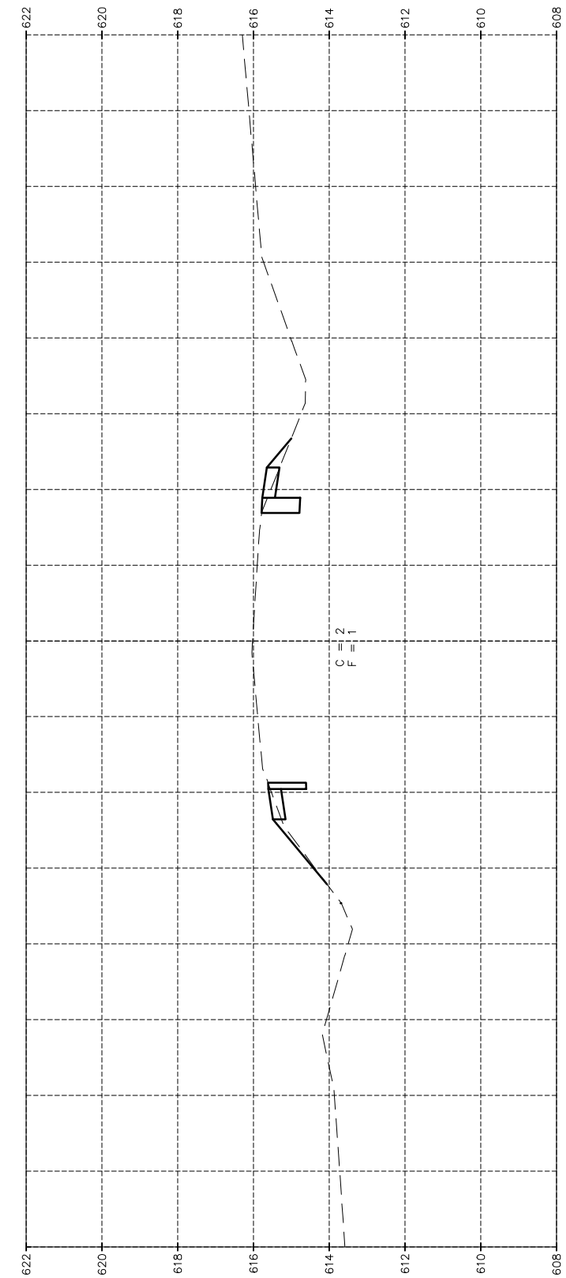

CHAMLIN & ASSOCIATES, INC. © 2011
Drawing Name: G:\Users\11\11912-00-Grundy-County-Greer-Road-Culvert\CAD\ETOPO-05-03-10.dwg Last Modified: Apr 28, 2016 - 9:53am Plotted on: May 03, 2016 - 9:25am by nancv

DRAWN BY: ARR	
CHECKED BY: JKC	
DATE: 04/16	

REVISIONS

LEVEL	BY	DATE	DESCRIPTION

CHAMLIN & ASSOCIATES

PERU MORRIS
ILLINOIS

GREER ROAD OVER BILL'S RUN
SECTION 10-14111-00-BR
NORMAN TOWNSHIP
GRUNDY COUNTY

CROSS SECTIONS

CONSTRUCTION PLANS

CURRENT AS OF: 05/03/2016
SCALE: AS NOTED
SHEET 17
FILE NO.: 11912.00 Y-
OF 17

ABV	ABOVE
A/C	ACCESS CONTROL
AC	ACRE
ADJ	ADJUST
AS	AERIAL SURVEYS
AGG	AGGREGATE
AH	AHEAD
APT	APARTMENT
ASPH	ASPHALT
AUX	AUXILIARY
AGS	AUXILIARY GAS VALVE (SERVICE)
AVE	AVENUE
AX	AXIS OF ROTATION
BK	BACK
B-B	BACK TO BACK
BKPL	BACKPLATE
B	BARN
BARR	BARRICADE
BGN	BEGIN
BM	BENCHMARK
BIND	BINDER
BIT	BITUMINOUS
BTM	BOTTOM
BLVD	BOULEVARD
BRK	BRICK
BBOX	BUFFALO BOX
BLDG	BUILDING
CIP	CAST IRON PIPE
CB	CATCH BASIN
C-C	CENTER TO CENTER
CL	CENTERLINE OR CLEARANCE
CL-E	CENTERLINE TO EDGE
CL-F	CENTERLINE TO FACE
CTS	CENTERS
CERT	CERTIFIED
CHSLD	CHISELED
CS	CITY STREET
CP	CLAY PIPE
CLSD	CLOSED
CLID	CLOSED LID
CT	COAT OR COURT
COMB	COMBINATION
C	COMMERCIAL BUILDING
CE	COMMERCIAL ENTRANCE
CONC	CONCRETE
CONST	CONSTRUCT
CONTD	CONTINUED
CONT	CONTINUOUS
COR	CORNER
CORR	CORRUGATED
CMP	CORRUGATED METAL PIPE
CNTY	COUNTY
CH	COUNTY HIGHWAY
CSE	COURSE
XSECT	CROSS SECTION
m^3	CUBIC METER
mm^3	CUBIC MILLIMETER
CU YD	CUBIC YARD
CULV	CULVERT
C&G	CURB & GUTTER
D	DEGREE OF CURVE
DC	DEPRESSED CURVE
DET	DETECTOR
DIA	DIAMETER
DIST	DISTRICT
DOM	DOMESTIC
DBL	DOUBLE
DSEL	DOWNSTREAM ELEVATION
DSFL	DOWNSTREAM FLOWLINE
DR	DRAINAGE OR DRIVE
DI	DRAINAGE INLET OR DROP INLET
DRV	DRIVEWAY
DCT	DUCT
EA	EACH
EB	EASTBOUND
EOP	EDGE OF PAVEMENT
E-CL	EDGE TO CENTERLINE
E-E	EDGE TO EDGE
EL	ELEVATION
ENTR	ENTRANCE
EXC	EXCAVATION
EX	EXISTING
EXPWAY	EXPRESSWAY
E	EXTERNAL DISTANCE OF HORIZONTAL CURVE
E	OFFSET DISTANCE TO VERTICAL CURVE
F-F	FACE TO FACE
FA	FEDERAL AID
FAI	FEDERAL AID INTERSTATE
FAP	FEDERAL AID PRIMARY
FAS	FEDERAL AID SECONDARY
FAUS	FEDERAL AID URBAN SECONDARY
FP	FENCE POST
FE	FIELD ENTRANCE
FH	FIRE HYDRANT
FL	FLOW LINE
FB	FOOT BRIDGE
FDN	FOUNDATION
FR	FRAME
F&G	FRAME & GRATE
FRWAY	FREEWAY
GAL	GALLON
GALV	GALVANIZED
G	GARAGE
GM	GAS METER
GV	GAS VALVE
GRAN	GRANULAR
GR	GRATE
GRVL	GRAVEL
GND	GROUND
GUT	GUTTER
GP	GUY POLE
GW	GUY WIRE
HH	HANDHOLE
HATCH	HATCHING
HD	HEAD
HDW	HEADWALL
HDUTY	HEAVY DUTY
ha	HECTARE
HMA	HOT MIX ASPHALT
HWY	HIGHWAY
HORIZ	HORIZONTAL
HSE	HOUSE
IL	ILLINOIS
IMP	IMPROVEMENT
IN DIA	INCH DIAMETER
INL	INLET
INST	INSTALLATION
IDS	INTERSECTION DESIGN STUDY
INV	INVERT
IP	IRON PIPE
IR	IRON ROD
JT	JOINT
kg	KILOGRAM
km	KILOMETER
LS	LANDSCAPING
LN	LANE
LT	LEFT
LP	LIGHT POLE
LGT	LIGHTING
LF	LINEAL FEET OR LINEAR FEET
L	LITER OR CURVE LENGTH
LC	LONG CHORD
LNG	LONGITUDINAL
L SUM	LUMP SUM
MACH	MACHINE
MB	MAIL BOX
MH	MANHOLE
MATL	MATERIAL
MED	MEDIAN
m	METER
METH	METHOD
M	MID-ORDINATE
mm	MILLIMETER
mm DIA	MILLIMETER DIAMETER
MIX	MIXTURE
MBH	MOBILE HOME
MOD	MODIFIED
MFT	MOTOR FUEL TAX
N & BC	NAIL & BOTTLE CAP
N & C	NAIL & CAP
N & W	NAIL & WASHER
NOAA	NATIONAL OCEANIC ATMOSPHERIC ADMINISTRATION
NC	NORMAL CROWN
NB	NORTHBOUND
NE	NORTHEAST
NW	NORTHWEST
OLID	OPEN LID
PAT	PATTERN
PVD	PAVED
PVMT	PAVEMENT
PM	PAVEMENT MARKING
PED	PEDESTAL
PNT	POINT
PC	POINT OF CURVATURE
PI	POINT OF INTERSECTION OF HORIZONTAL CURVE
PRC	POINT OF REVERSE CURVE
PT	POINT OF TANGENCY
POT	POINT ON TANGENT
POLYETH	POLYETHYLENE
PCC	PORTLAND CEMENT CONCRETE
PP	POWER POLE OR PRINCIPAL POINT
PRM	PRIME
PE	PRIVATE ENTRANCE
PROF	PROFILE
PGL	PROFILE GRADELINE
PROJ	PROJECT
P.C.	PROPERTY CORNER
PL	PROPERTY LINE
PR	PROPOSED
R	RADIUS
RR	RAILROAD
RRS	RAILROAD SPIKE
RPS	REFERENCE POINT STAKE
REF	REFLECTIVE
RCCP	REINFORCED CONCRETE CULVERT PIPE
REINF	REINFORCEMENT
REM	REMOVAL
RC	REMOVE CROWN
REP	REPLACEMENT
REST	RESTAURANT
RESURF	RESURFACING
RET	RETAINING
RT	RIGHT
ROW	RIGHT-OF-WAY
RD	ROAD
RDWY	ROADWAY
RTE	ROUTE
SAN	SANITARY
SANS	SANITARY SEWER
SEC	SECTION
SEED	SEEDING
SHAP	SHAPING
S	SHED
SH	SHEET
SHLD	SHOULDER
SW	SIDEWALK OR SOUTHWEST
SIG	SIGNAL
SOD	SODDING
SM	SOLID MEDIAN
SB	SOUTHBOUND
SE	SOUTHEAST
SPL	SPECIAL
SD	SPECIAL DITCH
SQ FT	SQUARE FEET
m^2	SQUARE METER
mm^2	SQUARE MILLIMETER
SQ YD	SQUARE YARD
STB	STABILIZED
STD	STANDARD
SBI	STATE BOND ISSUE
SR	STATE ROUTE
STA	STATION
SPBGR	STEEL PLATE BEAM GUARDRAIL
SS	STORM SEWER
STY	STORY
ST	STREET
STR	STRUCTURE
e	SUPERELEVATION RATE
S.E. RUN.	SUPERELEVATION RUNOFF LENGTH
SURF	SURFACE
SMK	SURVEY MARKER
T	TANGENT DISTANCE
T.R.	TANGENT RUNOUT DISTANCE
TEL	TELEPHONE
TB	TELEPHONE BOX
TP	TELEPHONE POLE
TEMP	TEMPORARY
TBM	TEMPORARY BENCH MARK
TD	TILE DRAIN
TBE	TO BE EXTENDED
TBR	TO BE REMOVED
TBS	TO BE SAVED
TWP	TOWNSHIP
TR	TOWNSHIP ROAD
TS	TRAFFIC SIGNAL
TSCB	TRAFFIC SIGNAL CONTROL BOX
TSC	TRAFFIC SYSTEMS CENTER
TRVS	TRANSVERSE
TRVL	TRAVEL
TRN	TURN
TY	TYPE
T-A	TYPE A
TYP	TYPICAL
UNDGND	UNDERGROUND
USGS	U.S. GEOLOGICAL SURVEY
USEL	UPSTREAM ELEVATION
USFL	UPSTREAM FLOWLINE
UTIL	UTILITY
VBOX	VALVE BOX
VV	VALVE VAULT
VLT	VAULT
VEH	VEHICLE
VP	VENT PIPE
VERT	VERTICAL
VC	VERTICAL CURVE
VPC	VERTICAL POINT OF CURVATURE
VPI	VERTICAL POINT OF INTERSECTION
VPT	VERTICAL POINT OF TANGENCY
WM	WATER METER
WV	WATER VALVE
WMAIN	WATER MAIN
WB	WESTBOUND
WILDFL	WILDFLOWERS
W	WITH
WO	WITHOUT

Illinois Department of Transportation

PASSED January 1, 2011

Michael Brand

ENGINEER OF POLICY AND PROCEDURES

APPROVED January 1, 2011

ENGINEER OF DESIGN AND ENVIRONMENT

ISSUED 1-1-97

DATE	REVISIONS
1-1-11	Updated abbreviations
	and symbols.
1-1-08	Updated abbreviations
	and symbols.

STANDARD SYMBOLS, ABBREVIATIONS AND PATTERNS

(Sheet 1 of 8)

STANDARD 000001–06

ADJUSTMENT ITEMS

	EX	PR
Structure To Be Adjusted		ADJ
Structure To Be Cleaned		C
Main Structure To Be Filled		FM
Structure To Be Filled		F
Structure To Be Filled Special		FSP
Structure To Be Removed		R
Structure To Be Reconstructed		REC
Structure To Be Reconstructed Special		RSP
Frame and Grate To Be Adjusted		A
Frame and Lid To Be Adjusted		A
Domestic Service Box To Be Adjusted		A
Valve Vault To Be Adjusted		A
Special Adjustment		SP
Item To Be Abandoned		AB
Item To Be Moved		M
Item To Be Relocated		REL
Pavement Removal and Replacement		

Illinois Department of Transportation

PASSED January 1, 2011
Michael Brand
ENGINEER OF POLICY AND PROCEDURES

APPROVED January 1, 2011
Scott Bennett
ENGINEER OF DESIGN AND ENVIRONMENT

ISSUED 1-1-97

ALIGNMENT ITEMS

	EX	PR
Baseline		
Centerline		
Centerline Break Circle		
Baseline Symbol		
Centerline Symbol		
PI Indicator		
Point Indicator		
Horizontal Curve Data (Half Size)	CURVE P.I. STA= Δ= D= R= T= L= E= e= T.R.= S.E. RUN= P.C. STA= P.T. STA=	CURVE P.I. STA= Δ= D= R= T= L= E= e= T.R.= S.E. RUN= P.C. STA= P.T. STA=

BOUNDARIES ITEMS

	EX	PR
Dashed Property Line		
Solid Property/Lot Line		
Section/Grant Line		
Quarter Section Line		
Quarter/Quarter Section Line		
County/Township Line		
State Line		
Iron Pipe Found		
Iron Pipe Set		
Survey Marker		
Property Line Symbol		
Same Ownership Symbol (Half Size)		
Northwest Quarter Corner (Half Size)		
Section Corner (Half Size)		
Southeast Quarter Corner (Half Size)		

CONTOUR ITEMS

	EX	PR
Approx. Index Line		
Approx. Intermediate Line		
Index Contour		
Intermediate Contour		

DRAINAGE ITEMS

	EX	PR
Channel or Stream Line		
Culvert Line		
Grading & Shaping Ditches		
Drainage Boundary Line		
Paved Ditch		
Aggregate Ditch		
Pipe Underdrain		
Storm Sewer		
Flowline		
Ditch Check		
Headwall		
Inlet		
Manhole		
Summit		
Roadway Ditch Flow		
Swale		
Catch Basin		
Culvert End Section		
Water Surface Indicator		
Riprap		

STANDARD SYMBOLS, ABBREVIATIONS AND PATTERNS

(Sheet 2 of 8)

STANDARD 000001-06

EROSION & SEDIMENT CONTROL ITEMS

	EX	PR
Cleaning & Grading Limits		
Dike		
Erosion Control Fence		
Perimeter Erosion Barrier		
Temporary Fence		
Ditch Check Temporary		
Ditch Check Permanent		
Inlet & Pipe Protection		
Sediment Basin		
Erosion Control Blanket		
Fabric Formed Concrete Revetment Mat		
Turf Reinforcement Mat		
Mulch Temporary		
Mulch Method 1		
Mulch Method 2 Stabilized		
Mulch Method 3 Hydraulic		

NON–HIGHWAY IMPROVEMENT ITEMS

	EX	PR
Noise Attn./Levee		
Field Line		
Fence		
Base of Levee		
Mailbox		
Multiple Mailboxes		
Pay Telephone		
Advertising Sign		

LANDSCAPING ITEMS

	EX	PR
Contour Mounding Line		
Fence		
Fence Post		
Shrubs		
Mowline		
Perennial Plants		
Seeding Class 2		
Seeding Class 2A		
Seeding Class 4		
Seeding Class 4 & 5 Combined		

EXISTING LANDSCAPING ITEMS (contd.)

	EX	PR
Seeding Class 5		
Seeding Class 7		
Seedlings Type 1		
Seedlings Type 2		
Sodding		
Mowstake w/Sign		
Tree Trunk Protection		
Evergreen Tree	E	
Shade Tree	E	+

LIGHTING

	EX	PR
Duct		
Conduit		
Electrical Aerial Cable	A	A
Electrical Buried Cable	L	L
Controller		
Underpass Luminaire		
Power Pole		

Illinois Department of Transportation

PASSED January 1, 2011

Michael Brand
ENGINEER OF POLICY AND PROCEDURES

APPROVED January 1, 2011

ENGINEER OF DESIGN AND ENVIRONMENT

ISSUED 1-1-97

STANDARD SYMBOLS, ABBREVIATIONS AND PATTERNS

(Sheet 3 of 8)

STANDARD 000001–06

LIGHTING (contd.)

	EX	PR
Pull Point		
Handhole		
Heavy Duty Handhole		
Junction Box		
Light Unit Comb.		
Electrical Ground		
Traffic Flow Arrow		
High Mast Pole (Half Size)		
Light Unit-1		

PAVEMENT (MISC.)

	EX	PR
Keyed Long. Joint		
Keyed Long. Joint w/Tie Bars		
Sawed Long. Joint w/Tie Bars		
Bituminous Shoulder		
Bituminous Taper		
Stabilized Driveway		
Widening		

PAVEMENT MARKINGS

	EX	PR
Bike Lane Symbol		
Bike Lane Text		BIKE LANE
Handicap Symbol		
RR Crossing		RR
Raised Marker Amber 1 Way		
Raised Marker Amber 2 Way		
Raised Marker Crystal 1 Way		
Two Way Turn Left		
Shoulder Diag. Pattern		
Skip-Dash White		
Skip-Dash Yellow		
Stop Line		
Solid Line		
Double Centerline		
Dotted Lines		
CL 2Ln 2Way RRPM 12.2 m (40') o.c.		
CL 2Ln 2Way RRPM 80' (24.4 m) o.c.		
CL Multilane Div. RRPM 40' (12.2 m) o.c.		
CL Multilane Div. RRPM 80' (24.4 m) o.c.		
CL Multilane Div. Dbl. RRPM 80' (24.4 m) o.c.		
CL Multilane Undiv.		
Two Way Turn Left Line		

Illinois Department of Transportation

PASSED January 1, 2011
Michael Brand
ENGINEER OF POLICY AND PROCEDURES

APPROVED January 1, 2011
Scott E. Stokes
ENGINEER OF DESIGN AND ENVIRONMENT

ISSUED 1-1-97

STANDARD SYMBOLS, ABBREVIATIONS AND PATTERNS

(Sheet 4 of 8)

STANDARD 000001–06

PAVEMENT MARKINGS (contd.)

	EX	PR
Urban Combination Left		
Urban Combination Right		
Urban Left Turn Arrow		
Urban Right Turn Arrow		
Urban Left Turn Only		ONLY
Urban Right Turn Only		ONLY
Urban Thru Only		ONLY
Urban U-Turn		
Urban Combined U-Turn		
Rural Combination Left		
Rural Combination Right		
Rural Left Turn Arrow		
Rural Right Turn Arrow		
Rural Left Turn Only		ONLY
Rural Right Turn Only		ONLY
Rural Thru Only		ONLY

RAILROAD ITEMS

	EX	PR
Abandoned Railroad		
Railroad		
Railroad Point		
Control Box		
Crossing Gate		
Flashing Signal		
Railroad Cant. Mast Arm		
Crossbuck		

REMOVAL ITEMS

	EX	PR
Removal Tic		
Bituminous Removal		
Hatch Pattern		
Tree Removal Single		

RIGHT OF WAY ITEMS

	EX	PR
Future ROW Corner Monument		
ROW Marker		
ROW Line		
Easement		
Temporary Easement		

Illinois Department of Transportation

PASSED January 1, 2011

Michael Brand
ENGINEER OF POLICY AND PROCEDURES

APPROVED January 1, 2011

Scott E. Stokes
ENGINEER OF DESIGN AND ENVIRONMENT

ISSUED 1-1-97

STANDARD SYMBOLS, ABBREVIATIONS AND PATTERNS

(Sheet 5 of 8)

STANDARD 000001–06

RIGHT OF WAY ITEMS (contd.)

	EX	PR
Access Control Line	AC	AC
Access Control Line & ROW	AC	AC
Access Control Line & ROW with Fence	AR	AC
Excess ROW Line		XS

ROADWAY PLAN ITEMS

	EX	PR
Cable Barrier		
Concrete Barrier		
Edge of Pavement		
Bit Shoulders, Medians and C&G Line		
Aggregate Shoulder		
Sidewalks, Driveways		
Guardrail		
Guardrail Post		
Traffic Sign		
Corrugated Median		
Impact Attenuator		
North Arrow with District Office (Half Size)	N	
Match Line		STA. 45+00
Slope Limit Line		
Typical Cross-Section Line		

ROADWAY PROFILES

	EX	PR
P.I. Indicator		
Point Indicator		
Earthworks Balance Point		
Begin Point		
Vert. Curve Data	VPI = ELEV= L = E =	VPI = ELEV= L = E =
Ditch Profile Left Side		
Ditch Profile Right Side		
Roadway Profile Line		
Storm Sewer Profile Left Side		
Storm Sewer Profile Right Side		

SIGNING ITEMS

	EX	PR
Cone, Drum or Barricade		
Barricade Type II		
Barricade Type III		
Barricade With Edge Line		
Flashing Light Sign		
Panels I		
Panels II		
Direction of Traffic		
Sign Flag (Half Size)		

SIGNING ITEMS (contd.)

	EX	PR
Reverse Left W1-4L (Half Size)		
Reverse Right W1-4R (Half Size)		
Two Way Traffic Sign W6-3 (Half Size)		
Detour Ahead W20-2(0) (Half Size)		DETOUR AHEAD
Left Lane Closed Ahead W20-5L(0) (Half Size)		LEFT LANE CLOSED AHEAD
Right Lane Closed Ahead W20-5R(0) (Half Size)		RIGHT LANE CLOSED AHEAD
Road Closed Ahead W20-3(0) (Half Size)		ROAD CLOSED AHEAD
Road Construction Ahead W20-1-(0) (Half Size)		ROAD CONSTRUCTION AHEAD
Single Lane Ahead (Half Size)		SINGLE LANE AHEAD
Transition Left W4-2L (Half Size)		
Transition Right W4-2R (Half Size)		

Illinois Department of Transportation

PASSED January 1, 2011
Michael Brand
ENGINEER OF POLICY AND PROCEDURES

APPROVED January 1, 2011
ENGINEER OF DESIGN AND ENVIRONMENT

ISSUED 1-1-97

STANDARD SYMBOLS, ABBREVIATIONS AND PATTERNS

(Sheet 6 of 8)

STANDARD 000001–06

SIGNING ITEMS (contd.)

	EX	PR
One Way Arrow Lrg. W1-6-(0) (Half Size)		
Two Way Arrow Large W1-7-(0) (Half Size)		
Detour M4-10L-(0) (Half Size)		DETOUR
Detour M4-10R-(0) (Half Size)		DETOUR
One Way Left R6-1L (Half Size)		ONE WAY
One Way Right R6-1R (Half Size)		ONE WAY
Left Turn Lane R3-I100L (Half Size)		LEFT TURN LANE
Keep Left R4-7AL (Half Size)		KEEP LEFT
Keep Left R4-7BL (Half Size)		KEEP LEFT
Keep Right R4-7AR (Half Size)		KEEP RIGHT
Keep Right R4-7BR (Half Size)		KEEP RIGHT
Stop Here On Red R10-6-AL (Half Size)		STOP HERE ON RED
Stop Here On Red R10-6-AR (Half Size)		STOP HERE ON RED
No Left Turn R3-2 (Half Size)		
No Right Turn R3-1 (Half Size)		
Road Closed R11-2 (Half Size)		ROAD CLOSED
Road Closed Thru Traffic R11-2 (Half Size)		ROAD CLOSED TO THRU TRAFFIC

STRUCTURES ITEMS

	EX	PR
Box Culvert Barrel		
Box Culvert Headwall		
Bridge Pier		
Bridge		
Retaining Wall		
Temporary Sheet Piling		

TRAFFIC SHEET ITEMS

	EX	PR
Cable Number		
Left Turn Green	G	G
Left Turn Yellow	Y	Y
Signal Backplate		
Signal Section 8" (200 mm)		
Signal Section 12" (300 mm)		
Walk/Don't Walk Letters	DW W	DW W
Walk/Don't Walk Symbols		

TRAFFIC SIGNAL ITEMS

	EX	PR
Galv. Steel Conduit		
Underground Cable		
Detector Loop Line		
Detector Loop Large		
Detector Loop Small		
Detector Loop Quadrapole		

Illinois Department of Transportation

PASSED January 1, 2011

Michael Brand

ENGINEER OF POLICY AND PROCEDURES

APPROVED January 1, 2011

ENGINEER OF DESIGN AND ENVIRONMENT

ISSUED 1-1-97

STANDARD SYMBOLS, ABBREVIATIONS AND PATTERNS

(Sheet 7 of 8)

STANDARD 000001–06

TRAFFIC SIGNAL ITEMS (contd.)

	EX	PR
Detector Raceway	"E"	
Aluminum Mast Arm		
Steel Mast Arm		
Veh. Detector Magnetic		
Conduit Splice		
Controller		
Gulfbox Junction		
Wood Pole		
Temp. Signal Head		
Handhole		
Double Handhole		
Heavy Duty Handhole	H	H
Junction Box		
Ped. Pushbutton Detector		
Ped. Signal Head		
Power Pole Service		
Priority Veh. Detector		
Signal Head		
Signal Head w/Backplate		
Signal Post		
Closed Circuit TV	C	C
Video Detector System	V	V

Illinois Department of Transportation

PASSED January 1, 2011
Michael Brand
ENGINEER OF POLICY AND PROCEDURES

APPROVED January 1, 2011
ENGINEER OF DESIGN AND ENVIRONMENT

ISSUED 1-1-97

UNDERGROUND UTILITY ITEMS

	EX	PR	ABANDONED
Cable TV	CTV	CTV	CTV
Electric Cable	E	E	E
Fiber Optic	FO	FO	FO
Gas Pipe	G	G	G
Oil Pipe	O	O	O
Sanitary Sewer			
Telephone Cable	T	T	T
Water Pipe	W	W	W

UTILITIES ITEMS

	EX	PR
Controller		
Double Handhole		
Fire Hydrant		
GuyWire or Deadman Anchor		
Handhole		
Heavy Duty Handhole	H	H
Junction Box		
Light Pole		
Manhole		
Pipeline Warning Sign		
Power Pole		
Power Pole with Light		
Sanitary Sewer Cleanout		
Splice Box Above Ground		
Telephone Splice Box Above Ground		
Telephone Pole		

UTILITY ITEMS (contd.)

	EX	PR
Traffic Signal		
Traffic Signal Control Box	TS	
Water Meter		
Water Meter Valve Box		
Profile Line		
Aerial Power Line	A A	A A

VEGETATION ITEMS

	EX	PR
Deciduous Tree		
Bush or Shrub		
Evergreen Tree		
Stump		
Orchard/Nursery Line		
Vegetation Line		
Woods & Bush Line		

WATER FEATURE ITEMS

	EX	PR
Stream or Drainage Ditch		
Waters Edge		
Water Surface Indicator		
Water Point		
Disappearing Ditch		
Marsh		
Marsh/Swamp Boundary		

STANDARD SYMBOLS, ABBREVIATIONS AND PATTERNS

(Sheet 8 of 8)

STANDARD 000001-06

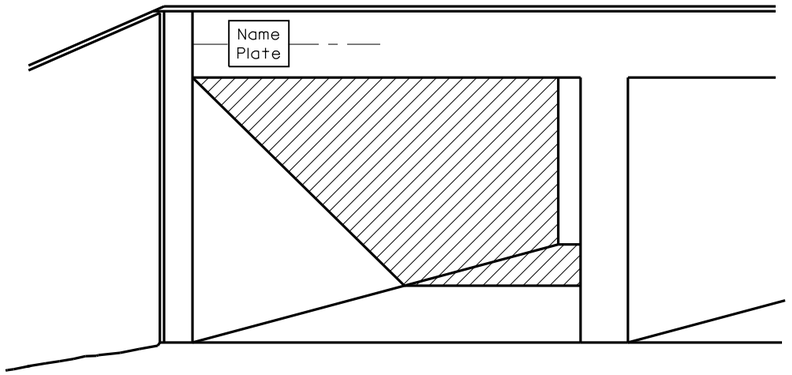

FOR MULTI–SPAN CULVERTS

(Unless otherwise noted on the plans, name plates are not required for stuctures less than 20′ (6.1 m) in length)

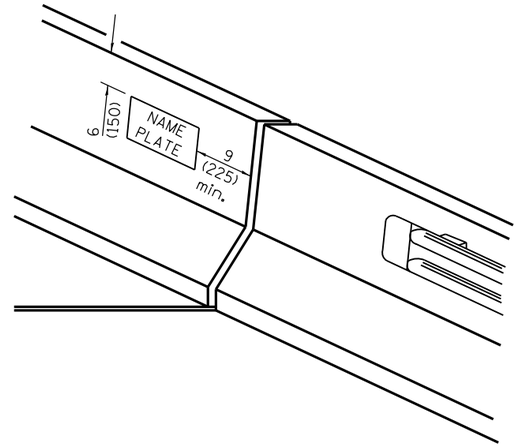

FOR PARAPET AND END POST MOUNTED

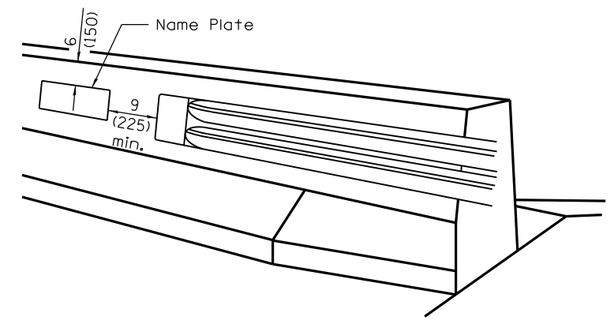

FOR PARAPET

(When Dog Ear Wing is used)

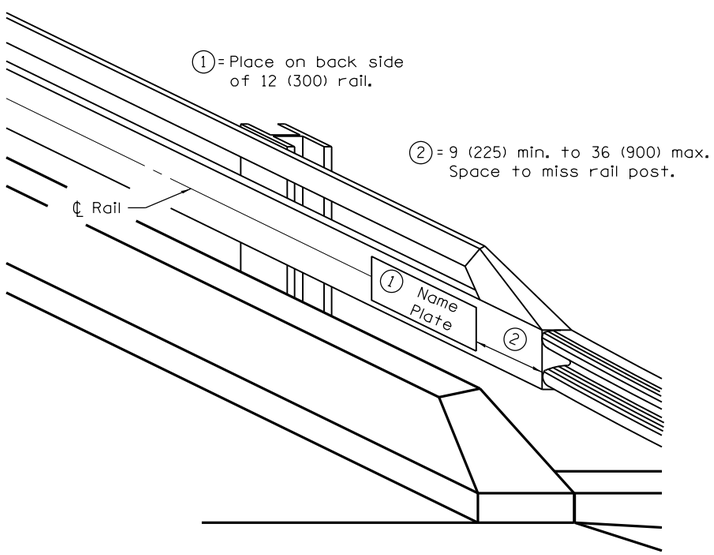

FOR STEEL RAILS

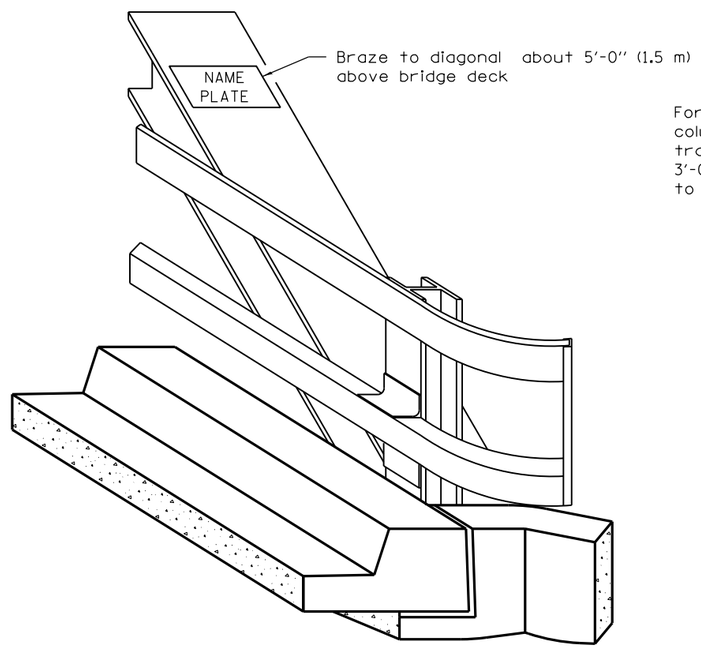

FOR TRUSSES

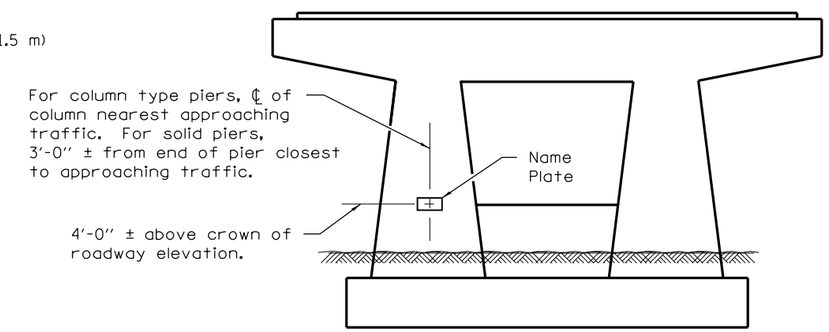

FOR PIERS ON FAI ROUTES

GENERAL NOTES

On one-way traffic structures, place name plate on right side of approach end. On two-way traffic structures, place name plate on right side of approach end while looking in the direction of increasing stationing.

All dimensions are in inches (millimeters) unless otherwise shown.

Illinois Department of Transportation

APPROVED January 1, 2009
ENGINEER OF BRIDGES AND STRUCTURES

APPROVED January 1, 2009
ENGINEER OF DESIGN AND ENVIRONMENT

ISSUED 1-1-97

DATE	REVISIONS
1-1-09	Switched units to
	English (metric). Added
	pier detail.
1-1-02	Remove Placing: note on
	sht. 2. Added Braze to
	diag. note on sht. 1.

NAME PLATE FOR BRIDGES

(Sheet 1 of 2)

STANDARD 515001–03

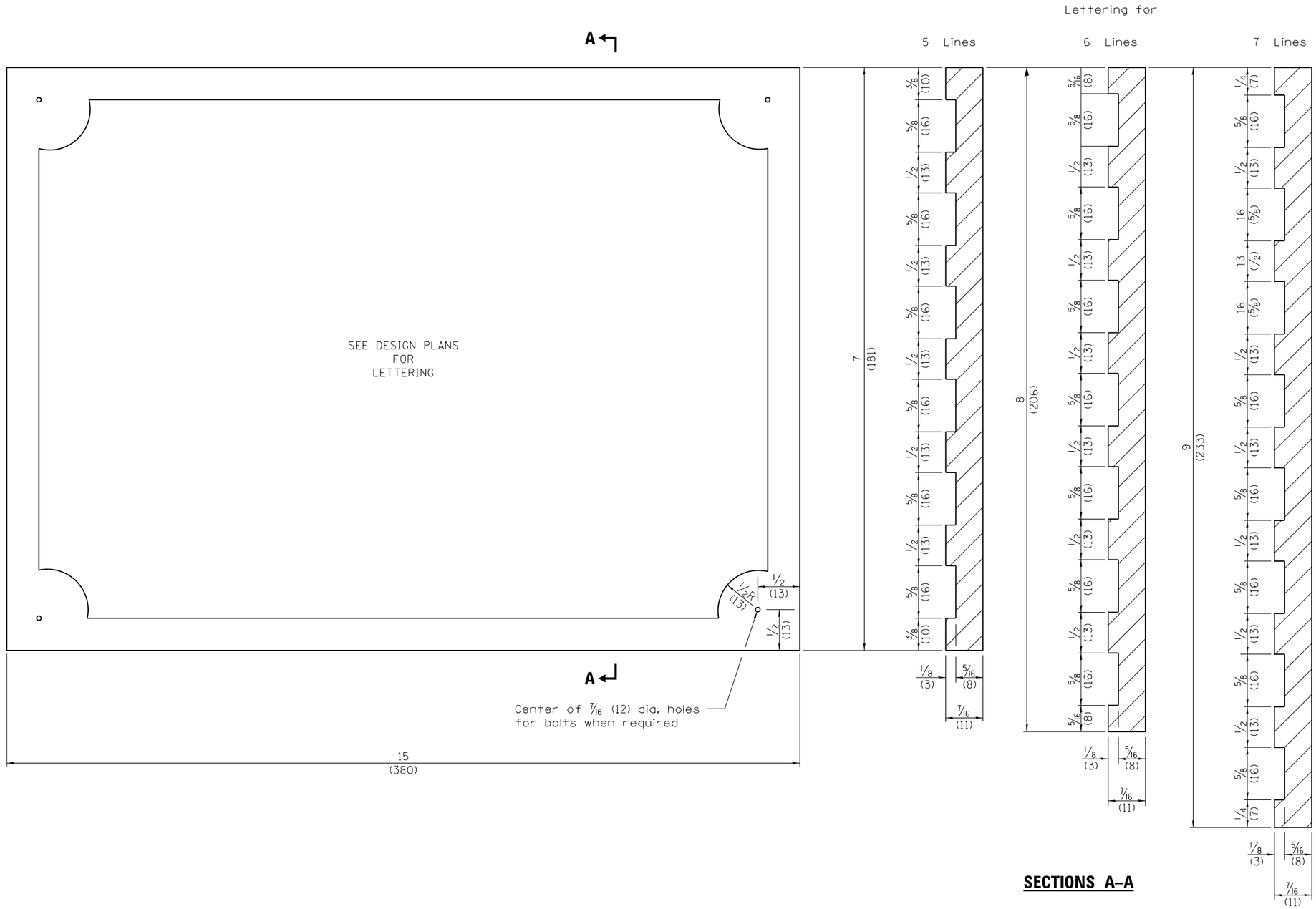

NOTE
Border and lettering:
Raised 1/8 (3), square cut and not tapered.

Illinois Department of Transportation

APPROVED January 1, 2009
Ralph E. Anderson
ENGINEER OF BRIDGES AND STRUCTURES

APPROVED January 1, 2009
Eric E. Harm
ENGINEER OF DESIGN AND ENVIRONMENT

ISSUED 1-1-97

NAME PLATE FOR BRIDGES

(Sheet 2 of 2)

STANDARD 515001–03

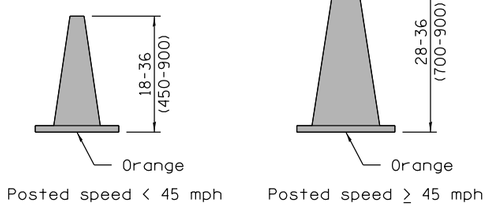

CONE FOR DAYTIME

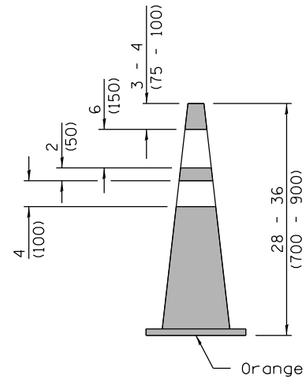

REFLECTORIZED CONE FOR NIGHTTIME

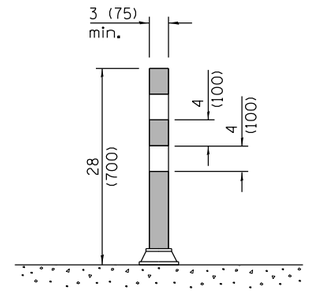

FLEXIBLE DELINEATOR

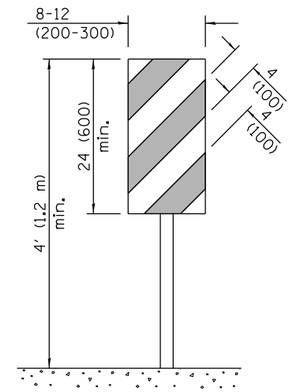

VERTICAL PANEL
POST MOUNTED

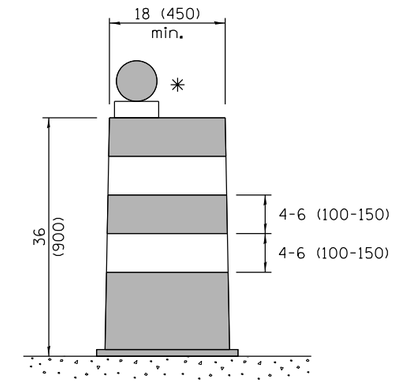

DRUM

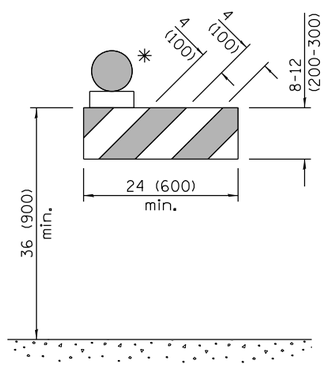

TYPE I BARRICADE

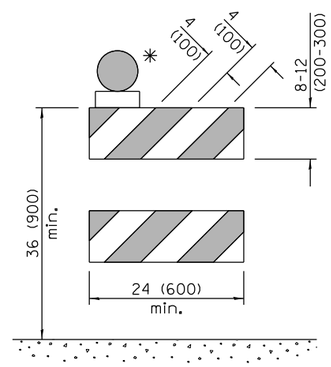

TYPE II BARRICADE

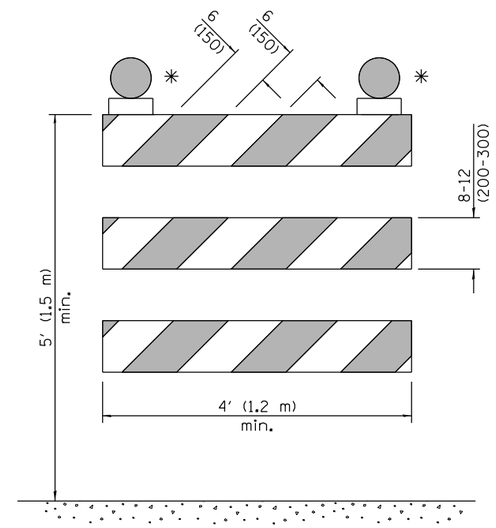

TYPE III BARRICADE

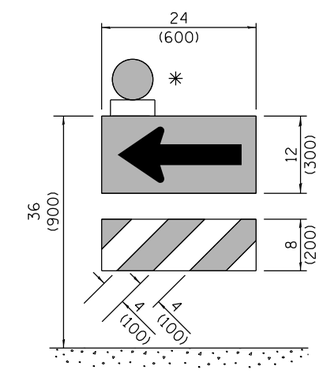

DIRECTION INDICATOR BARRICADE

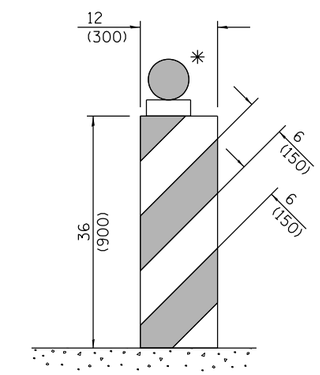

VERTICAL BARRICADE

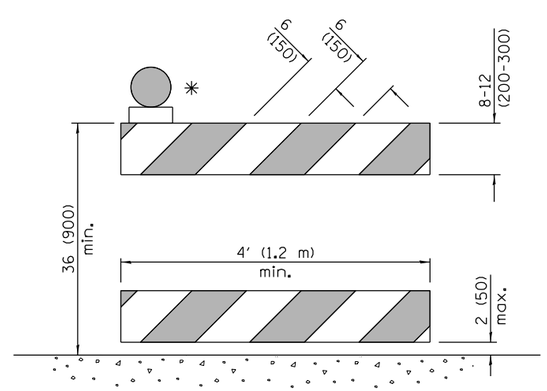

DETECTABLE PEDESTRIAN CHANNELIZING BARRICADE

✳ Warning lights (if required)

GENERAL NOTES

All heights shown shall be measured above the pavement surface.

All dimensions are in inches (millimeters) unless otherwise shown.

DATE	REVISIONS
4-1-16	Add dim's to barricades. Rev.
	note for post mnt. signs.
	Rev. cone dtls. Add W12-I103.
1-1-15	Revised two sign numbers on
	sheet 2. Added note reg.
	PHOTO ENFORCED plaque.

TRAFFIC CONTROL DEVICES

(Sheet 1 of 3)

STANDARD 701901-05

Illinois Department of Transportation

APPROVED April 1, 2016
ENGINEER OF OPERATIONS

APPROVED April 1, 2016
ENGINEER OF DESIGN AND ENVIRONMENT

ISSUED 1-1-97

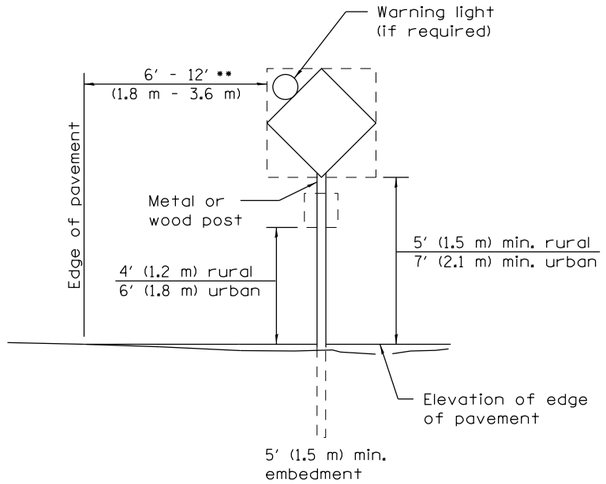

POST MOUNTED SIGNS

•• When curb or paved shoulder are present this dimension shall be 24 (600) to the face of curb or 6′ (1.8 m) to the outside edge of the paved shoulder.

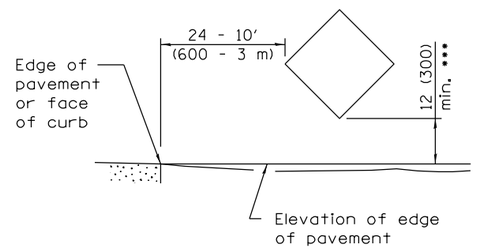

SIGNS ON TEMPORARY SUPPORTS

••• When work operations exceed four days, this dimension shall be 5′ (1.5 m) min. If located behind other devices, the height shall be sufficient to be seen completely above the devices.

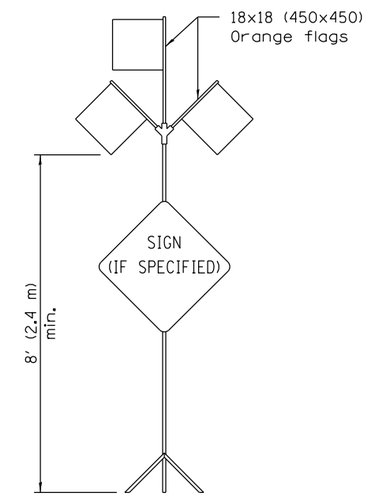

HIGH LEVEL WARNING DEVICE

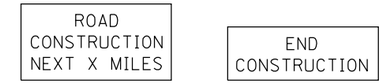

G20-I104(0)-6036 G20-I105(0)-6024

This signing is required for all projects 2 miles (3200 m) or more in length.

ROAD CONSTRUCTION NEXT X MILES sign shall be placed 500′ (150 m) in advance of project limits.

END CONSTRUCTION sign shall be erected at the end of the job unless another job is within 2 miles (3200 m).

Dual sign displays shall be utilized on multi-lane highways.

WORK LIMIT SIGNING

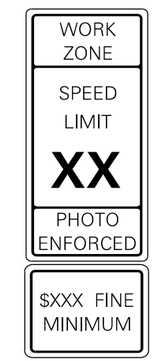

W21-I115(0)-3618

R2-1-3648

R10-I108p-3618 ••••

R2-I106p-3618

Sign assembly as shown on Standards or as allowed by District Operations.

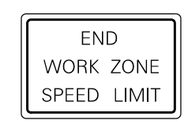

G20-I103(0)-6036

This sign shall be used when the above sign assembly is used.

HIGHWAY CONSTRUCTION SPEED ZONE SIGNS

•••• R10-I108p shall only be used along roadways under the juristiction of the State.

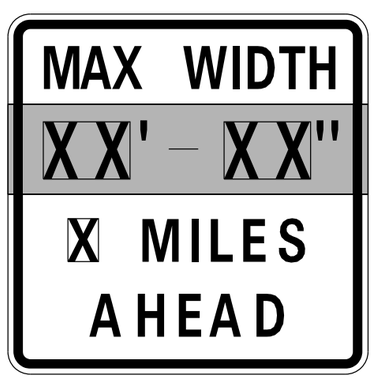

W12-I103-4848

WIDTH RESTRICTION SIGN

XX′-XX″ width and X miles are variable.

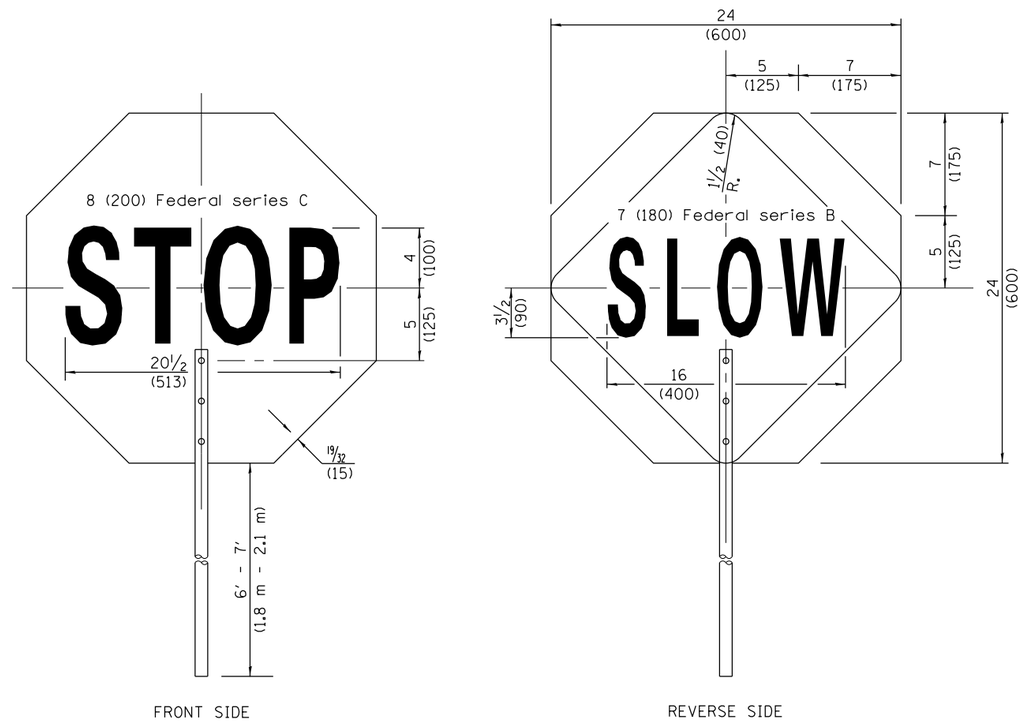

FLAGGER TRAFFIC CONTROL SIGN

Illinois Department of Transportation

APPROVED April 1, 2016
ENGINEER OF OPERATIONS

APPROVED April 1, 2016
ENGINEER OF DESIGN AND ENVIRONMENT

ISSUED 1-1-97

TRAFFIC CONTROL DEVICES

(Sheet 2 of 3)

STANDARD 701901–05

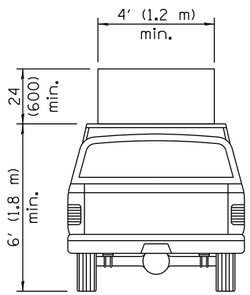

TYPE A
ROOF
MOUNTED

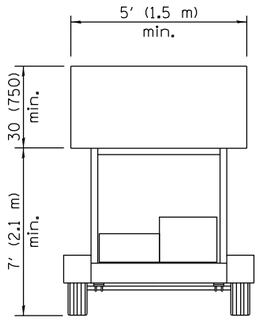

TYPE B
ROOF OR TRAILER
MOUNTED

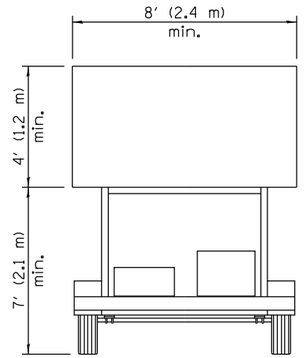

TYPE C
TRAILER
MOUNTED

ARROW BOARDS

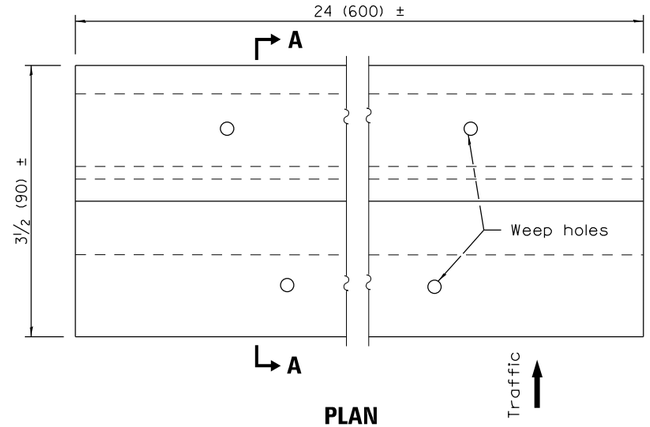

PLAN

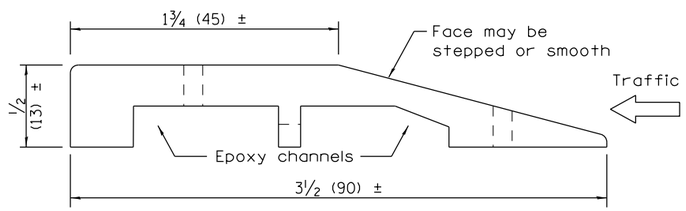

SECTION A–A

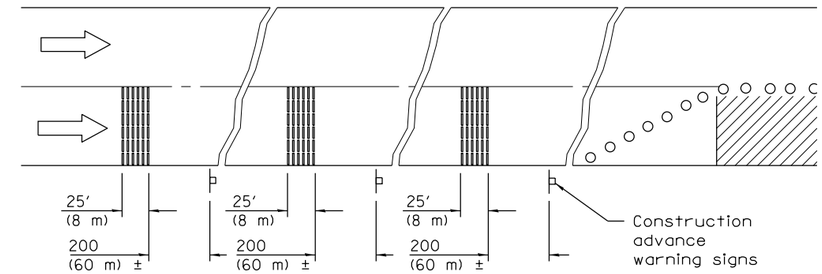

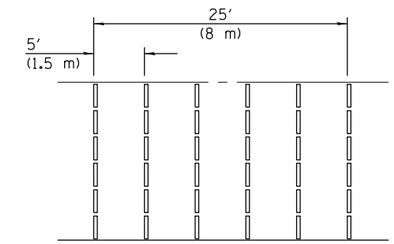

TYPICAL INSTALLATION

TEMPORARY RUMBLE STRIPS

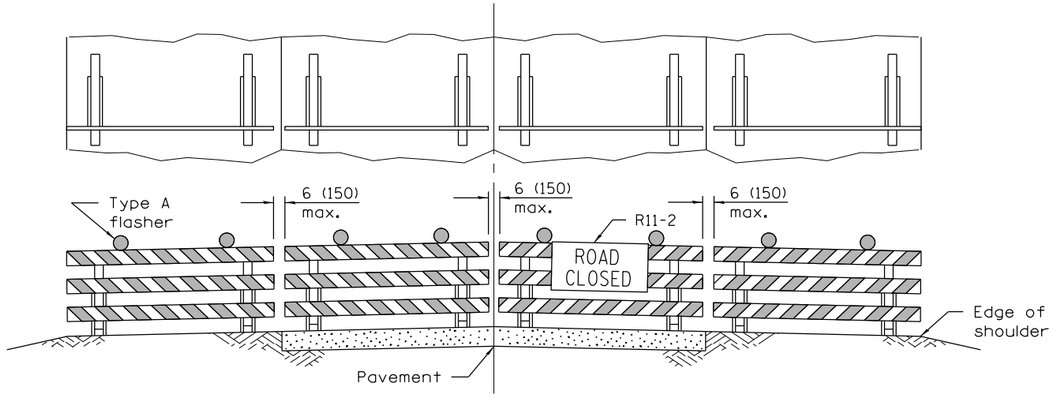

ROAD CLOSED TO ALL TRAFFIC

Reflectorized striping may be omitted on the back side of the barricades. If a Type III barricade with an attached sign panel which meets NCHRP 350 is not available, the sign may be mounted on an NCHRP 350 temporary sign support directly in front of the barricade.

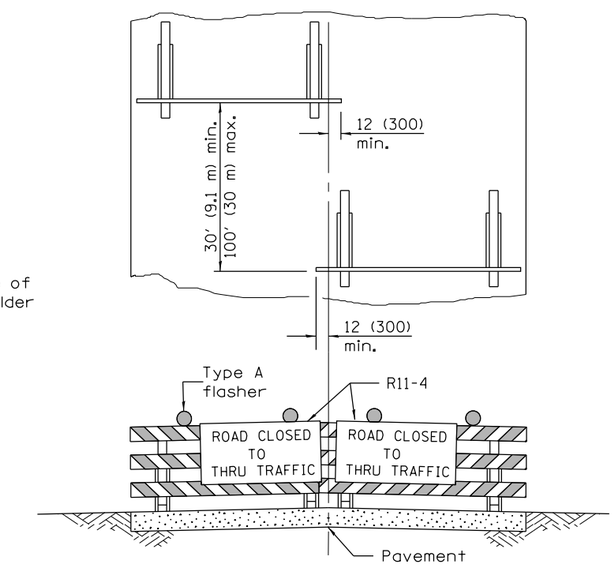

ROAD CLOSED TO THRU TRAFFIC

Reflectorized striping shall appear on both sides of the barricades. If a Type III barricade with an attached sign panel which meets NCHRP 350 is not available, the signs may be mounted on NCHRP 350 temporary sign supports directly in front of the barricade.

TYPICAL APPLICATIONS OF
TYPE III BARRICADES CLOSING A ROAD

Illinois Department of Transportation

APPROVED April 1, 2016
ENGINEER OF OPERATIONS
APPROVED April 1, 2016
ENGINEER OF DESIGN AND ENVIRONMENT

ISSUED 1-1-97

TRAFFIC CONTROL DEVICES

(Sheet 3 of 3)

STANDARD 701901–05

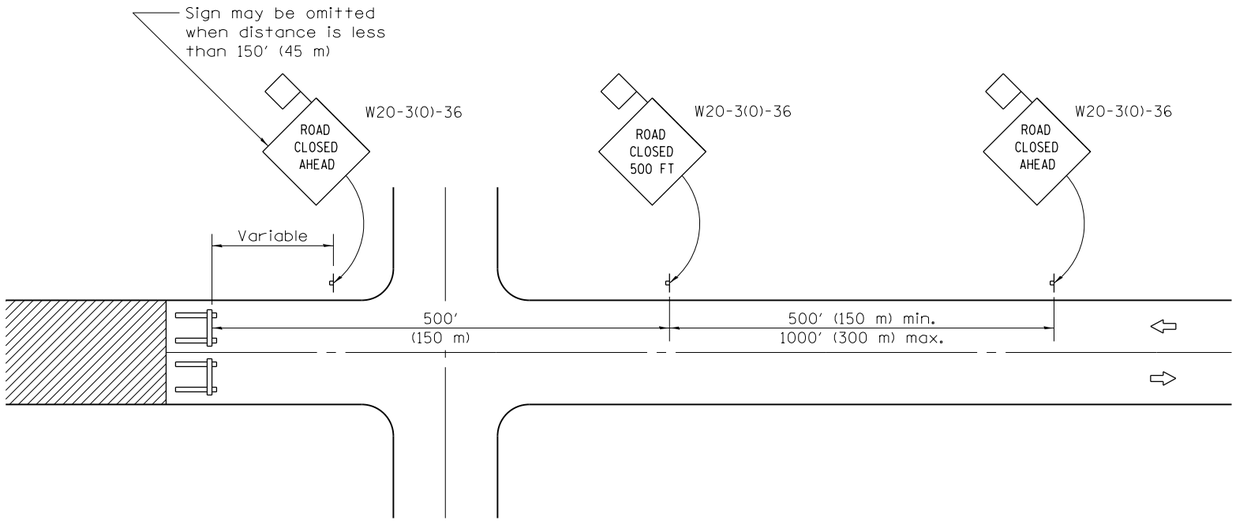

CONDITION I

When distance from closure to crossroad is less than 1500′ (450 m)

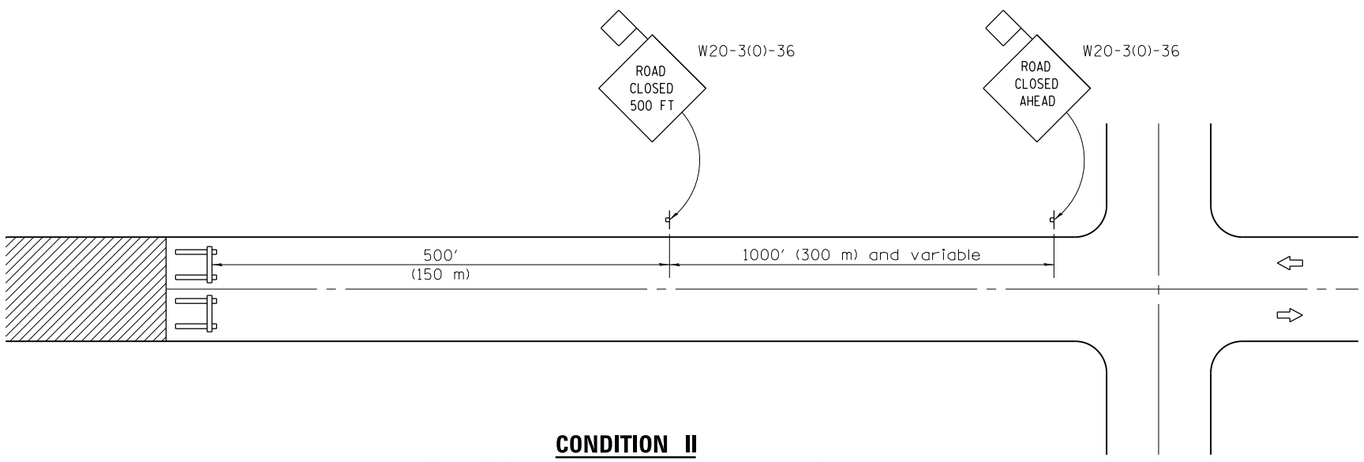

CONDITION II

When distance from closure to crossroad is greater than 1500′ (450 m)

SYMBOLS

Work area

Type III Barricade

Sign with 18x18 (450x450) min. orange flag attached

GENERAL NOTES

Type III Barricades and R11-2-4830 signs shall be positioned as shown in "Road Closed To All Traffic" detail on Highway Standard 701901.

Two Type A Low Intensity Flashing Lights shall be used on each approach in advance of the work area during hours of darkness. One light shall be installed above the barricades and the other above the first advance warning sign.

All warning signs shall have minimum dimensions of 36 x 36 (900 x 900) and have a black legend on an orange reflectorized background.

When fluorescent signs are used, orange flags are not required.

Longitudinal dimensions may be adjusted to fit field conditions.

When the distance between the barricade and the intersection is between 1500′ (450 m) and 2000′ (600 m), the advance sign shall be placed at the intersection. When the distance between the barricade and the intersection is over 2000′ (600 m), an additional sign shall be placed at the intersection. The additional sign shall give the distance to the barricade in miles or fractions of a mile.

All dimensions are in inches (millimeters) unless otherwise shown.

Illinois Department of Transportation

APPROVED January 1, 2012
ENGINEER OF LOCAL ROADS AND STREETS

APPROVED January 1, 2012
ENGINEER OF DESIGN AND ENVIRONMENT

ISSUED 1-1-97

DATE	REVISIONS
1-1-12	Omitted two notes from
	GENERAL NOTES.
1-1-09	Switched units to
	English (metric).

TYPICAL APPLICATION OF TRAFFIC CONTROL DEVICES FOR CONSTRUCTION ON RURAL LOCAL HIGHWAYS

STANDARD B.L.R. 21–9

CONDITION I
APPROACH TRAFFIC STOPPED

CONDITION II
APPROACH TRAFFIC DOES NOT STOP

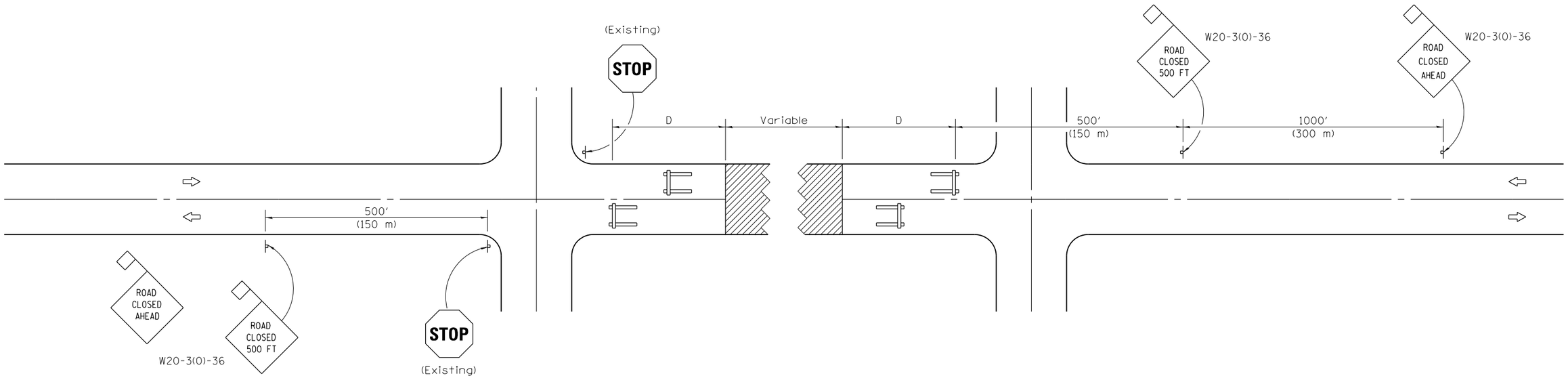

SYMBOLS

Work area

Type III Barricade

Sign with 18x18 (450x450) min. orange flag attached

GENERAL NOTES

Type III Barricades and R11-4-6030 signs shall be positioned as shown in the "Road Closed To All Traffic" detail on Highway Standard 701901. If the distance "D" exceeds 2000′ (600 m), an additional set of barricades and R11-4-6030 shall be placed at each end of the work area.

Two Type A Low Intensity Flashing Lights shall be used on each approach in advance of the work area. One light shall be installed above each barricade. If only one barricade is required, the other light shall be installed above the first advance warning sign.

All warning signs shall have minimum dimensions of 36 x 36 (900 x 900) and have a black legend on an orange reflectorized background.

When fluorescent signs are used, orange flags are not required.

Longitudinal dimensions may be adjusted to fit field conditions.

All dimensions are in inches (millimeters) unless otherwise shown.

Illinois Department of Transportation

APPROVED January 1, 2012
ENGINEER OF LOCAL ROADS AND STREETS

APPROVED January 1, 2012
ENGINEER OF DESIGN AND ENVIRONMENT

ISSUED 1-1-97

DATE	REVISIONS
1-1-12	Omitted two notes from
	GENERAL NOTES.
1-1-09	Revised General Notes
	and switched units to
	English (metric).

TYPICAL APPLICATION OF TRAFFIC CONTROL DEVICES FOR CONSTRUCTION ON RURAL LOCAL HIGHWAYS
(TWO-LANE TWO WAY RURAL TRAFFIC)
(ROAD CLOSED TO THRU TRAFFIC)

STANDARD B.L.R. 22–7