EXISTING STRUCTURE NO. 032-3175

PROPOSED STRUCTURE NO. 032-3176

INDEX OF SHEETS

SHEET NO.	TITLE
1	COVER SHEET
2	PLAN & PROFILE
3	GENERAL PLAN & ELEVATION
4 – 6	SUPERSTRUCTURE
7 – 8	STEEL RAILING TYPE S1
9	ABUTMENT DETAILS
10	HP PILE DETAILS
11 – 12	BORING LOGS
13 – 14	ROADWAY CROSS SECTIONS
STANDARDS	280001-07 515001-03 701901-06 725001-01 BLR 21-9

STATE OF ILLINOIS
DEPARTMENT OF TRANSPORTATION
DIVISION OF HIGHWAYS
PLANS FOR PROPOSED NON-MOTOR FUEL TAX

SECTION 16-00160-00-BR
GRUNDY COUNTY
C.H. V16

ROAD CLASSIFICATION: LOCAL ROAD (0-250 A.D.T.)

SUMMARY OF QUANTITIES

CODE NO.	ITEM	UNIT	QUANTITY
20100110	TREE REMOVAL (6 TO 15 UNITS DIAMETER)	UNIT	12
20100210	TREE REMOVAL (OVER 15 UNITS DIAMETER)	UNIT	178
20200100	EARTH EXCAVATION	CU YD	150
20300100	CHANNEL EXCAVATION	CU YD	99
20400800	FURNISHED EXCAVATION	CU YD	1859
20700110	POROUS GRANULAR EMBANKMENT	TON	78
28000305	TEMPORARY DITCH CHECKS	FOOT	20
28100107	STONE RIPRAP, CLASS A4	SQ YD	370
28200200	FILTER FABRIC	SQ YD	370
35101400	AGGREGATE BASE COURSE, TYPE B	TON	1043
40600275	BITUMINOUS MATERIALS (PRIME COAT)	POUND	4576
40600290	BITUMINOUS MATERIALS (TACK COAT)	POUND	420
40602995	HOT-MIX ASPHALT BINDER COURSE, IL-12.5, N30	TON	322
40603305	HOT-MIX ASPHALT SURACE COURSE, MIX "C", N30	TON	248
44000100	PAVEMENT REMOVAL	SQ YD	660
50100100	REMOVAL OF EXISTING STRUCTURES	EACH	1
50300225	CONCRETE STRUCTURES	CU YD	31.6
50300280	CONCRETE ENCASEMENT	CY YD	3.5
50400605	PRECAST PRESTRESSED CONCRETE DECK BEAM (33" DEPTH)	SQ FT	2460
50800205	REINFOREMENT BARS, EPOXY COATED	POUND	4100
50900205	STEEL RAILING, TYPE S1	FOOT	164
51201600	FURNISHING STEEL PILES HP12X53	FOOT	242
51202305	DRIVING PILES	FOOT	242
51203600	TEST PILE, STEEL HP12X53	EACH	1
51500100	NAME PLATES	EACH	1
542D0220	PIPE CULVERTS, CLASS D, TYPE 1 15"	FOOT	42
58100200	WATERPROOFING MEMBRANE SYSTEM	SQ YD	279
58300100	PORTLAND CEMENT MORTAR FAIRING COURSE	FOOT	495
70110216	TRAFFIC CONTROL AND PROTECTION (SPECIAL)	L SUM	1
72501000	TERMINAL MARKER -DIRECT APPLIED	EACH	4
X2501000	SEEDING, CLASS 2 (SPECIAL)	ACRE	0.6
Z0004638	PAVEMENT BREAKING	SQ YD	1080
Z0013798	CONSTRUCTION LAYOUT	L SUM	1
	PIPE DRAIN (SPECIAL)	FOOT	92

* SEE SPECIAL PROVISIONS

TREE REMOVAL (6 TO 15 UNITS DIAMETER)

32' RT. STA. 29+48	=	12 UNIT
TOTAL	=	12 UNIT

TREE REMOVAL (OVER 15 UNITS DIAMETER)

27' RT. STA. 29+20	=	20 UNIT
30' RT. STA. 29+25	=	16 UNIT
30' RT. STA. 29+46	=	16 UNIT
32' LT. STA. 30+45	=	36 UNIT
33' RT. STA. 30+78	=	30 UNIT
29' LT. STA. 30+98	=	30 UNIT
37' RT. STA. 31+03	=	30 UNIT
TOTAL	=	178 UNIT

N
W E
S
N.T.S.

PROPOSED STRUCTURE

IMPROVEMENT BEGINS STA. 27+80
IMPROVEMENT ENDS STA. 37+00

R 7 E, 3rd PM

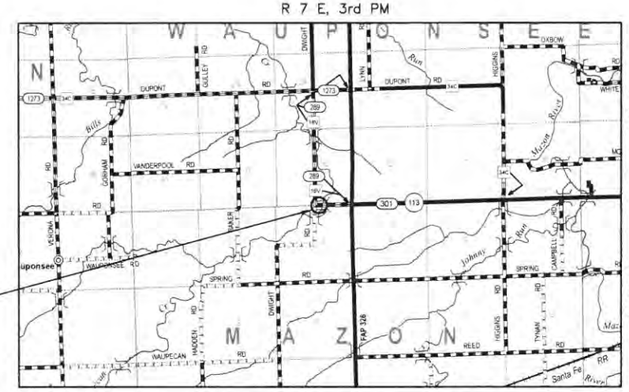

LOCATION MAP

GROSS LENGTH OF SECTION = 920.00 FEET = 0.174 MILES
NET LENGTH OF SECTION = 920.00 FEET = 0.174 MILES

HOT-MIX ASPHALT MIXTURE REQUIREMENTS

MIXTURE USE(S)	H.M.A. SURFACE COURSE	H.M.A. BINDER COURSE
PG:	PG 58-22	PG 58-22
DESIGN AIR VOIDS:	4% @ N30	4% @ N30
MIXTURE COMPOSITION: (GRADATION MIXTURE)	IL-9.5	IL-12.5
FRICTION AGGREGATE	MIX "C"	
QUALITY MANAGEMENT	QC/QA	QC/QA

APPLICATION RATES USED IN QUANTITY CALCULATIONS

BITUMINOUS MATERIALS (PRIME COAT)	0.25#/SQ. FT.
BITUMINOUS MATERIALS (TACK COAT)	0.025#/SQ. FT.
HOT-MIX ASPHALT (BINDER & SURFACE COURSE)	112#/SQ YD/IN
AGGREGATE SHOULDERS	2.05 TON/CU YD
AGGREGATE BASE COURSE	2.05 TON/CU YD

THE ABOVE NOTED APPLICATION RATES FOR BITUMINOUS MATERIALS ARE FOR QUANTITY CALCULATIONS ONLY. THE APPLICATION RATE TO BE APPLIED WILL BE DETERMINED BY THE ENGINEER AT THE TIME OF PLACEMENT.

FULL SIZE PLAN SCALES

Plan & Profile
Hor. 1" = 50'
Vert. 1" = 5'
Cross Sections
Hor. 1" = 10'
Vert. 1" = 5'

UTILITIES

J.U.L.I.E. System – Toll free telephone number for Joint Utility Location Information for Excavators is: 1-800-892-0123.

FEHR GRAHAM
ENGINEERING & ENVIRONMENTAL
ILLINOIS DESIGN FIRM NO. 184-003525
© 2016 FEHR GRAHAM

Illinois Professional No. 48930
(expires)
Date:11/30/17

5/1/17

MARK R. LEIGHTON
062-048930
REGISTERED PROFESSIONAL ENGINEER
STATE OF ILLINOIS

STATE OF ILLINOIS
DEPARTMENT OF TRANSPORTATION
DIVISION OF HIGHWAYS

APPROVED _____, 20 ____
GRUNDY COUNTY ENGINEER

PASSED _____, 20 ____
DISTRICT THREE LOCAL ROADS & STREETS ENGINEER

Releasing for Bid Based on Limited Review _____, 20 ____
REGION TWO ENGINEER

G:\C301\16\16-097\Plans\16-097-plans.dwg, FD-34x22 TITLE
PLOT DATE: 5/1/17

© 2016 FEHR GRAHAM

CHANNEL EXCAVATION

THE CHANNEL SHALL BE EXCAVATED AS SHOWN WITHIN THE LIMITS OF THE PROPOSED BRIDGE, THEN TAPERED TO THE EXISTING CHANNEL AT THE R.O.W. LINE.

SUITABLE MATERIAL MAY BE USED IN THE ROADWAY EMBANKMENT AS DIRECTED BY THE ENGINEER. UNSUITABLE AND EXCESS MATERIAL NOT USED SHALL BE DISPOSED OF BY THE CONTRACTOR. SAID DISPOSAL SHALL BE INCIDENTAL TO CHANNEL EXCAVATION.

SE 1/4 SEC. 33, T.33N., R.7E., 3RD P.M.
DAVID W. LOWERY, ET AL

NOTE "A"
CONSTRUCT TRANSITION FROM EXISTING ROADWAY TO PROPOSED ROADWAY IN 50 FEET. EARTHWORK AND AGGREGATE SURFACE COURSE ARE INCLUDED IN QUANTITIES.

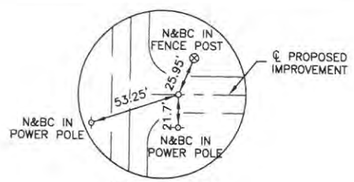

STA 25+00.00
5/8" IRON PIN

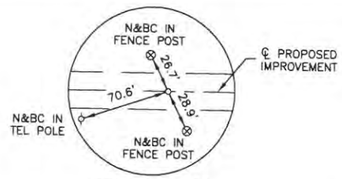

STA 35+00.00
5/8" IRON PIN

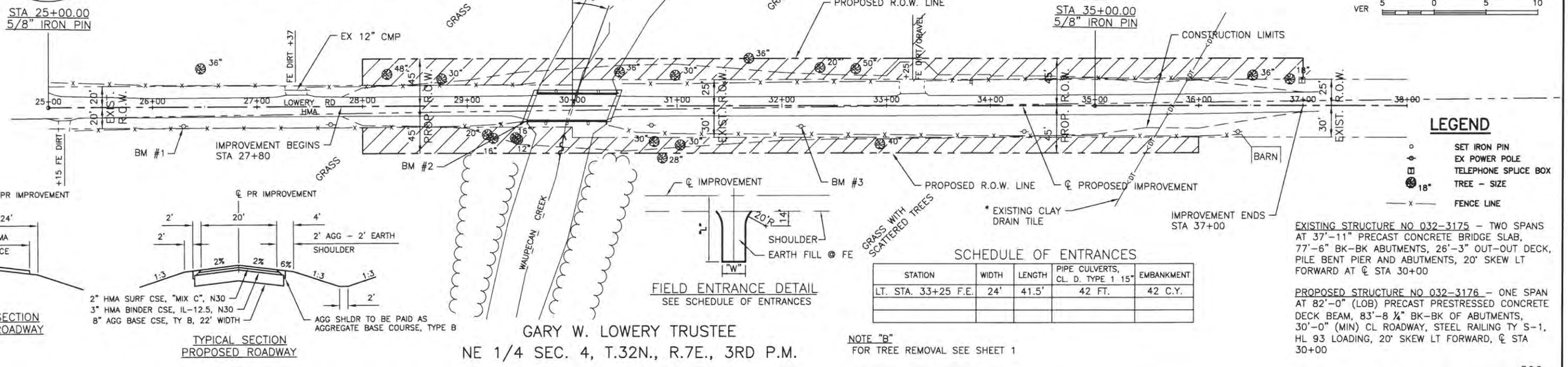

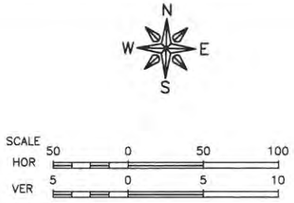

LEGEND

- SET IRON PIN
- EX POWER POLE
- TELEPHONE SPLICE BOX
- 18" TREE – SIZE
- —x— FENCE LINE

EXISTING STRUCTURE NO 032-3175 – TWO SPANS AT 37'-11" PRECAST CONCRETE BRIDGE SLAB, 77'-6" BK-BK ABUTMENTS, 26'-3" OUT-OUT DECK, PILE BENT PIER AND ABUTMENTS, 20° SKEW LT FORWARD AT ℄ STA 30+00

PROPOSED STRUCTURE NO 032-3176 – ONE SPAN AT 82'-0" (LOB) PRECAST PRESTRESSED CONCRETE DECK BEAM, 83'-8 ¼" BK-BK OF ABUTMENTS, 30'-0" (MIN) CL ROADWAY, STEEL RAILING TY S-1, HL 93 LOADING, 20° SKEW LT FORWARD, ℄ STA 30+00

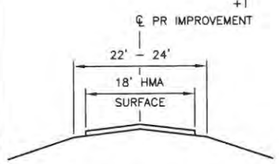

TYPICAL SECTION
EXISTING ROADWAY

TYPICAL SECTION
PROPOSED ROADWAY

FIELD ENTRANCE DETAIL
SEE SCHEDULE OF ENTRANCES

GARY W. LOWERY TRUSTEE
NE 1/4 SEC. 4, T.32N., R.7E., 3RD P.M.

SCHEDULE OF ENTRANCES

STATION	WIDTH	LENGTH	PIPE CULVERTS, CL. D. TYPE 1 15"	EMBANKMENT
LT. STA. 33+25 F.E.	24'	41.5'	42 FT.	42 C.Y.

NOTE "B"
FOR TREE REMOVAL SEE SHEET 1

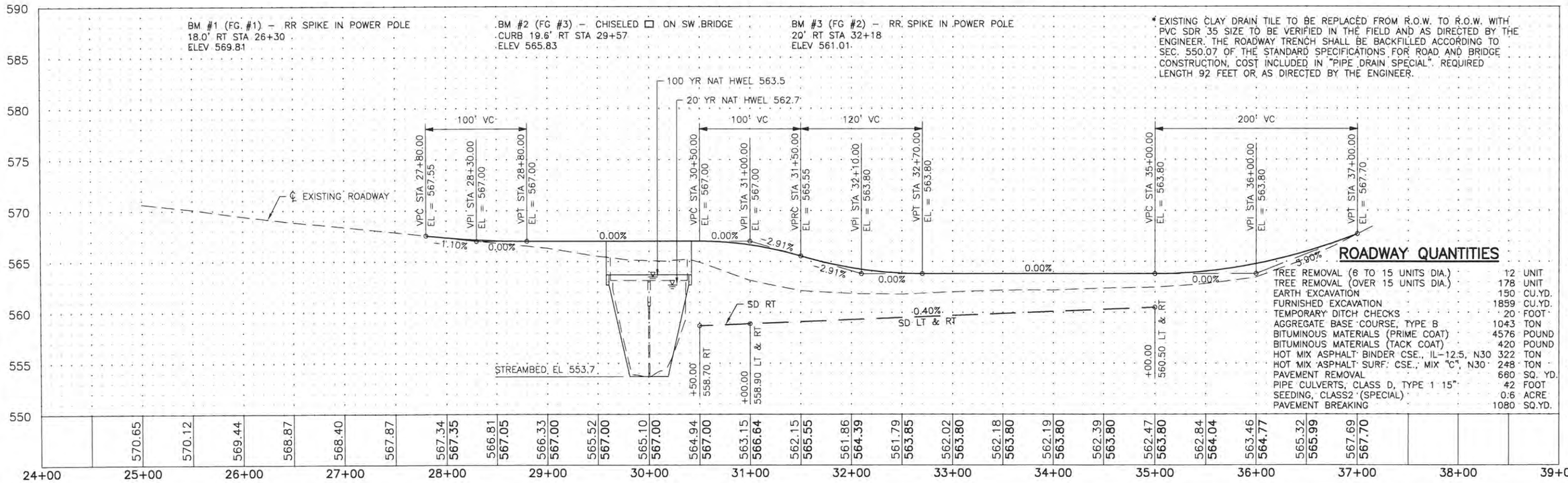

ROADWAY QUANTITIES

TREE REMOVAL (6 TO 15 UNITS DIA.)	12	UNIT
TREE REMOVAL (OVER 15 UNITS DIA.)	178	UNIT
EARTH EXCAVATION	150	CU.YD.
FURNISHED EXCAVATION	1859	CU.YD.
TEMPORARY DITCH CHECKS	20	FOOT
AGGREGATE BASE COURSE, TYPE B	1043	TON
BITUMINOUS MATERIALS (PRIME COAT)	4576	POUND
BITUMINOUS MATERIALS (TACK COAT)	420	POUND
HOT MIX ASPHALT BINDER CSE., IL-12.5, N30	322	TON
HOT MIX ASPHALT SURF. CSE., MIX "C", N30	248	TON
PAVEMENT REMOVAL	660	SQ. YD.
PIPE CULVERTS, CLASS D, TYPE 1 15"	42	FOOT
SEEDING, CLASS2 (SPECIAL)	0.6	ACRE
PAVEMENT BREAKING	1080	SQ.YD.

FEHR GRAHAM
ENGINEERING & ENVIRONMENTAL
ILLINOIS DESIGN FIRM NO. 184-003525

ILLINOIS
IOWA
WISCONSIN

OWNER/DEVELOPER:
GRUNDY COUNTY

PROJECT AND LOCATION:
SECTION 16-00160-00-BR
C.H. V16/LOWERY RD OVER WAUPECAN CREEK

DRAWN BY: CFC
APPROVED BY: MRL
DATE: 7-19-16
SCALE: AS NOTED

REVISIONS

REV. NO.	DESCRIPTION	DATE

DRAWING:
PLAN & PROFILE

JOB NUMBER:
16-097

SHEET NUMBER:
2 of 14

PLOT DATE: 8/1/17

© 2016 FEHR GRAHAM

Existing Structure: SN 032-3175 - Two span precast concrete slab bridge. 77'-6" bk-bk abutments, 26'-3" out-out deck, 20° skew, left ahead at ℄ Sta. 30+00.00. The existing structure is to be removed and replaced under total road closure with marked detour.

No Salvage.

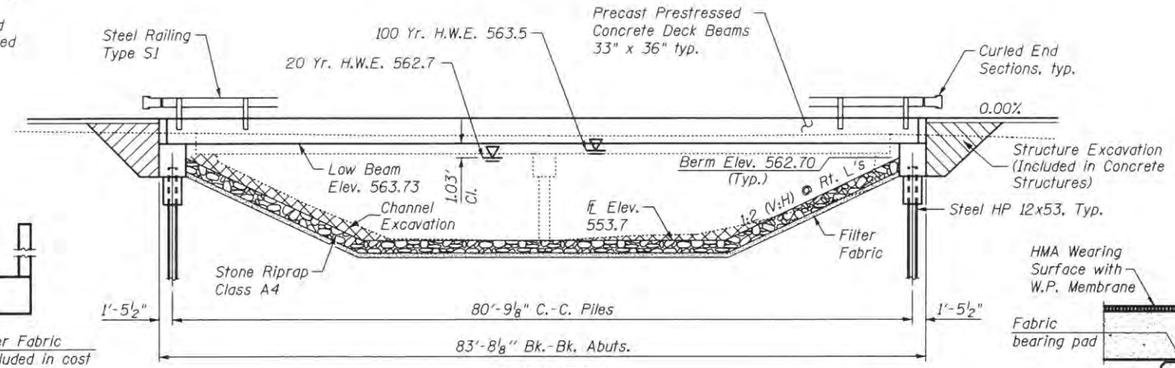

ELEVATION

Note: Cr. Elevations shown are to top of H.M.A. Surface.

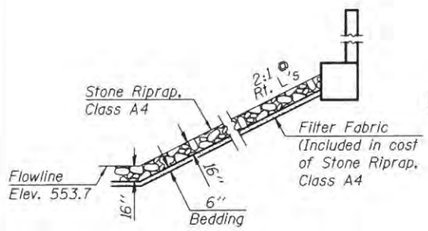

SECTION A-A

Excavation will not be paid for as a separate item and shall be considered as included in Stone Riprap, Class A4.

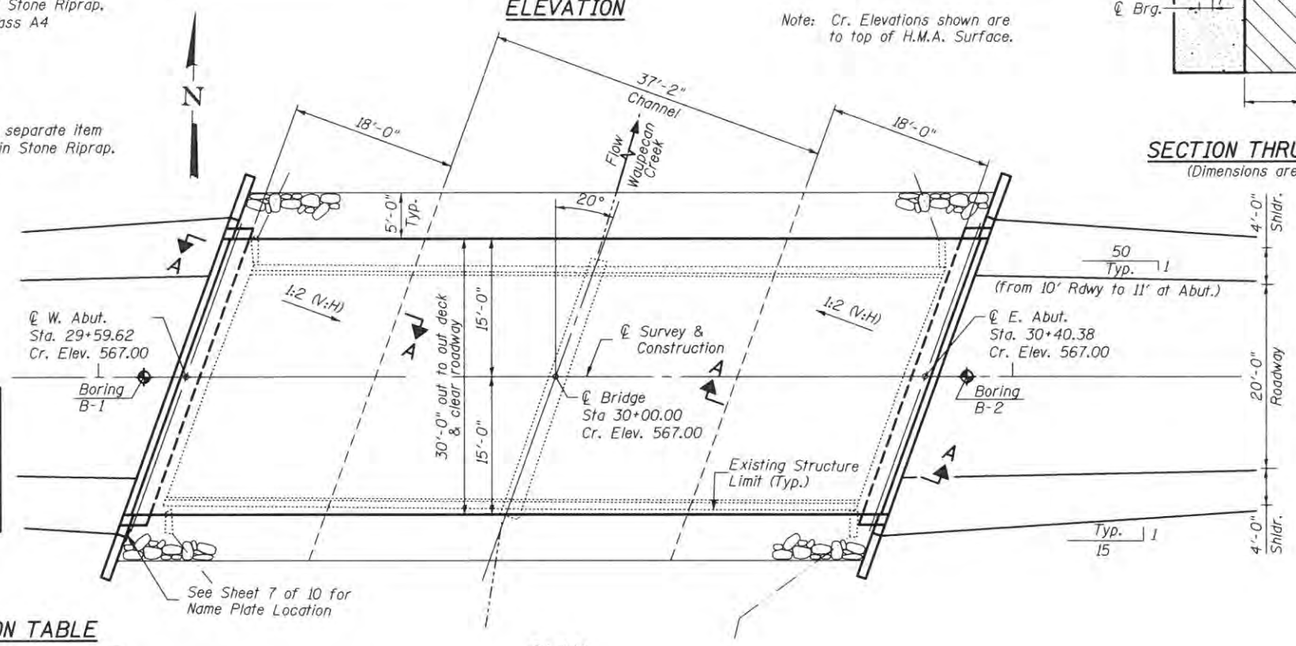

PLAN

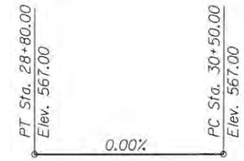

PROFILE GRADE

(Along proposed ℄)

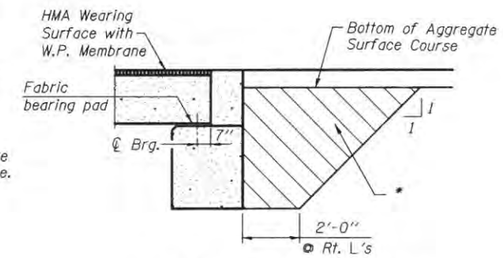

SECTION THRU ABUTMENT

(Dimensions are at Rt. L's)

* Limits of Porous Granular Embankment Limits extend to 1'-0" beyond the width of either side of roadway surface. Porous Granular Embankment shall be placed and compacted in 6" lifts.

GENERAL NOTES

Class SI Concrete shall be used throughout.

Reinforcement bars shall conform to the requirements of ASTM A706 Grade 60.

Reinforcement bars designated (E) shall be epoxy coated.

The Contractor shall drive one steel HP 12x53 test pile in a permanent location at the West abutment as directed by the Engineer, before ordering the remainder of piles.

Layout of riprap may be varied in the field to suit ground conditions as directed by the Engineer.

The Standard Specifications adopted by the Department of Transportation April, 1, 2016 apply to this work.

LOADING HL-93

Allow 50#/sq. ft. for future wearing surface.

DESIGN SPECIFICATIONS

2014 AASHTO LRFD Bridge Design Specifications, 7th Edition with 2016 Interims

DESIGN STRESSES

FIELD UNITS

f'c = 3,500 psi
fy = 60,000 psi (Reinforcement)

PRECAST PRESTRESSED UNITS

f'_c = 6,000 psi
f'_{ci} = 5,000 psi
f'_s = 270,000 psi (0.50" ϕ low lax. strands)
f_{si} = 201,960 psi (0.50" ϕ low lax. strands)

SEISMIC DATA

Seismic Performance Zone (SPZ) = 1
Design Spectral Acceleration at 1.0 sec. (S_{D1}) = 0.071
Design Spectral Acceleration at 0.2 sec. (S_{DS}) = 0.128
Soil Site Class = C

TOTAL BILL OF MATERIAL

ITEM	UNIT	SUPER	SUB	TOTAL
Channel Excavation	Cu. Yd.		99	99
Precast Prestressed Concrete Deck Beams (33" Depth)	Sq. Ft.	2460		2460
Removal of Existing Structures	Each			1
Concrete Structures	Cu. Yd.		31.6	31.6
Reinforcement Bars, Epoxy Coated	Pound		4100	4100
Steel Railing, Type S1	Foot	164		164
Name Plates	Each		1	1
Furnishing Steel Piles HP12x53	Foot		242	242
Driving Piles	Foot		242	242
Test Pile Steel HP12x53	Each		1	1
Stone Riprap, Class A4	Sq. Yd.		370	370
Concrete Encasement	Cu. Yd.		3.5	3.5
Portland Cement Mortar Fairing Course	Foot	495		495
Waterproofing Membrane System	Sq. Yd.	279		279
Hot Mix Asphalt Surface Course, "Mix C", N30	Ton	38		38
Porous Granular Embankment	Ton		78	78
Filter Fabric	Sq. Yd.		370	370

WAUPECAN CREEK
BUILT 20__ BY
GRUNDY COUNTY
SEC. 16-00160-00-BR
F.A.S. RTE. 289 STA. 30+00
STR. NO. 032-3176 LOADING HL-93

NAME PLATE

See Std. 515001

DESIGN SCOUR ELEVATION TABLE

Event/Limit State	Design Scour Elevations (ft.) W. Abut.	E. Abut.	Item 113
Q100	--	--	8
Q200	--	--	
Design	560.67	560.67	
Check	560.67	560.67	

WATERWAY INFORMATION

Drainage Area = 46.3 sq. mi.

Flood Event	Freq. Yr.	Discharge Ft³/s	Waterway Opening - ft² Existing	Proposed	Natural H.W.E. ft.	Head - ft. Existing	Proposed	Headwater Elevation ft. Existing	Proposed
Design	20	1835	445-Bridge 253-Appr.	449-Bridge 0-Appr.	562.7	0.1	0.2	562.8	562.9
Base	100	2450	529-Bridge 577-Appr.	577-Bridge 0-Appr.	563.5	0.0	0.3	563.5	563.8

"I certify that to the best of my knowledge, information and belief, this bridge design is structurally adequate for the design loading shown on the plans. The design is an economical one for the style of structure and complies with requirements of the specified 'AASHTO LRFD Bridge Design Specifications'."

LICENSED STRUCTURAL ENGINEER MARY COOMBE BLOXDORF 4859 SPRINGFIELD STATE OF ILLINOIS

Mary Coombe Bloxdorf

ILLINOIS STRUCTURAL NO. 4859
EXPIRES 11/30/18
DATE: 05/01/2017

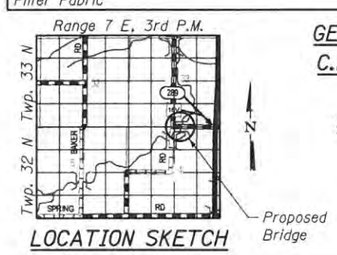

LOCATION SKETCH

GENERAL PLAN & ELEVATION
C.H. V16/LOWERY ROAD OVER
F.A.S. ROUTE 289
SECTION 16-00160-00-BR
GRUNDY COUNTY
STATION 30+00.00
S.N. 032-3176

Sheet 1 of 10

FEHR GRAHAM
ENGINEERING & ENVIRONMENTAL
ILLINOIS DESIGN FIRM NO. 184-003525
ILLINOIS IOWA WISCONSIN

PLOT DATE: 4/7/2017

© 2013 FEHR-GRAHAM

AGENCY: GRUNDY COUNTY HWY. DEPT. 245 NORTH ILLINOIS ROUTE 47 MORRIS, IL 60450

PROJECT: SECTION 16-00160-00-BR C.H. V16/LOWERY ROAD OVER WAUPECAN CREEK

DESIGNED: ARK
CHECKED: MRL
DRAWN: MMY
CHECKED: ARK-MCB

REVISIONS		
REV. NO.	DESCRIPTION	DATE

DRAWING: GENERAL PLAN AND ELEVATION STRUCTURE NUMBER 032-3176

...\plans\bridge\16-097-01-gpe.dgn

JOB NUMBER: 16-097

SHEET NUMBER 3 of 14

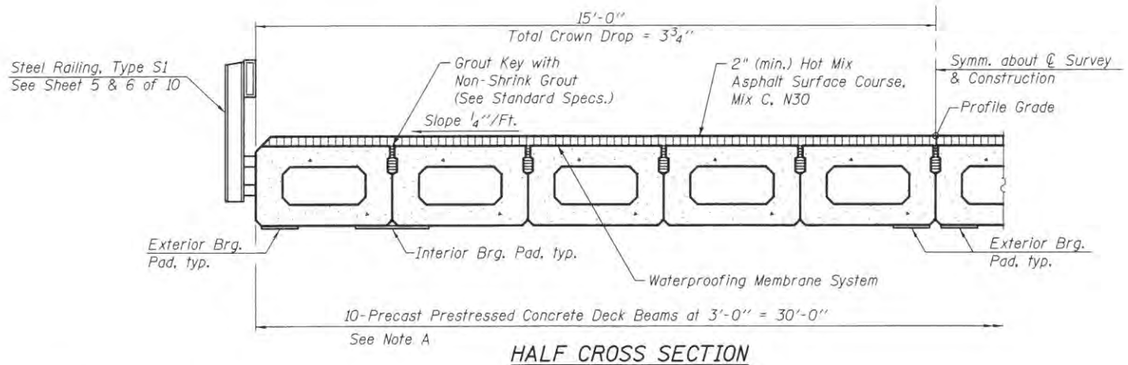

HALF CROSS SECTION

Note A:
The top surface of the beams shall be finished in accordance with the "Manual for Fabrication of Precast Prestressed Concrete Products" and the surface shall not be roughened by brooming.

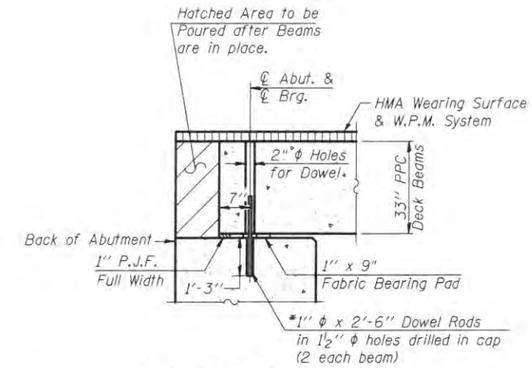

SEC. THRU ABUT.

(@ Rt. L's)

* Note: After beams are in place, 1½" holes shall be drilled into the Substructure, and the dowel rods grouted in place and allowed to cure (Min. 24 Hrs.) prior to grouting shear key.

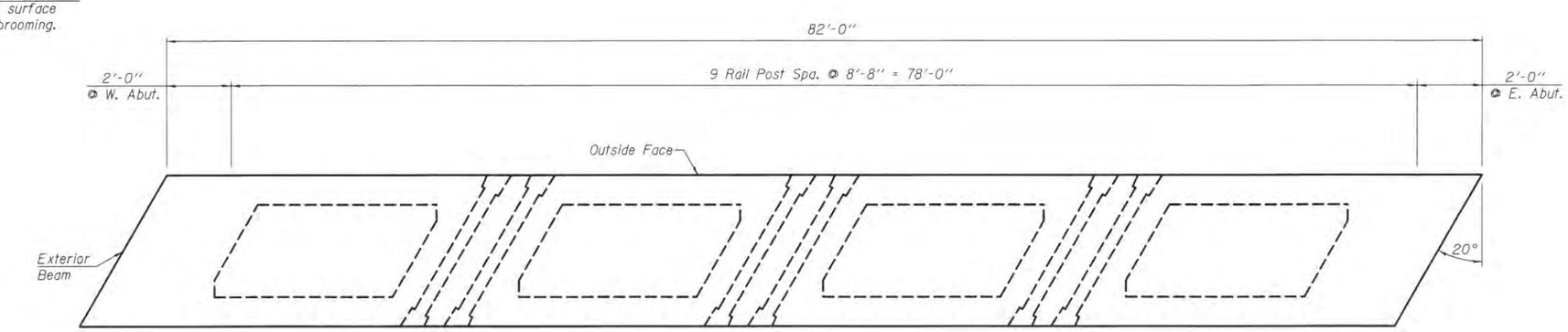

RAIL POST SPACING PLAN

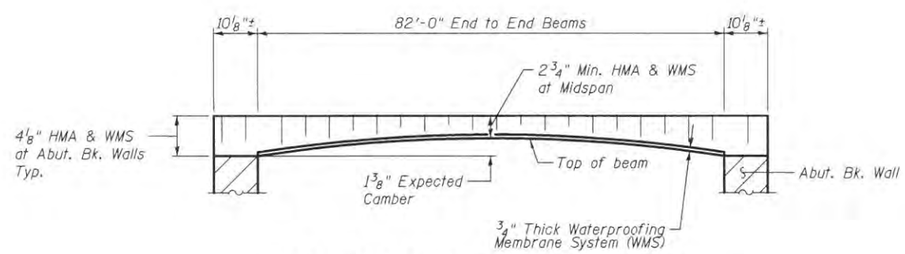

HOT MIX ASPHALT SURFACE PROFILE

FEHR GRAHAM
ENGINEERING & ENVIRONMENTAL
ILLINOIS DESIGN FIRM NO. 184-003525
ILLINOIS
IOWA
WISCONSIN

PLOT DATE:4/7/2017

©2013 FEHR-GRAHAM

AGENCY:
GRUNDY COUNTY HWY. DEPT.
245 NORTH ILLINOIS ROUTE 47
MORRIS, IL 60450

PROJECT:
SECTION 16-00160-00-BR
C.H. V16/LOWERY ROAD
OVER WAUPECAN CREEK

DESIGNED: ARK
CHECKED: MRL
DRAWN: MMY
CHECKED: ARK-MCB

REVISIONS

REV. NO.	DESCRIPTION	DATE

DRAWING:
SUPERSTRUCTURE
STRUCTURE NUMBER 032-3176
...\bridge\16-097-02-super.dgn

JOB NUMBER:
16-097

SHEET NUMBER
4 of 14

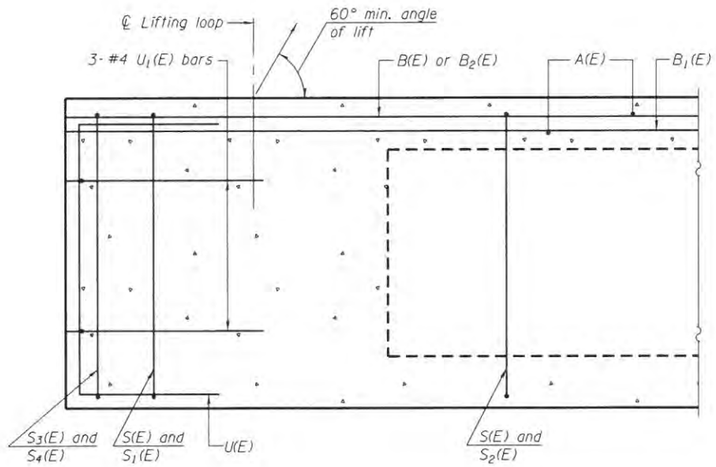

SECTION A-A

Note: See Sheets 5 and 6 of 10 for railing insert locations.

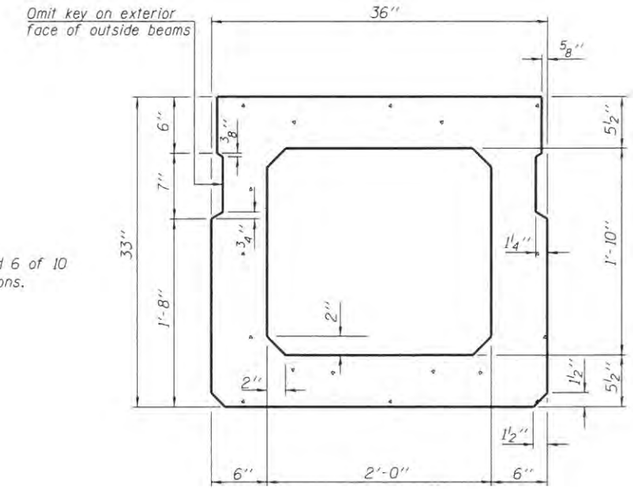

SECTION B-B
(Showing dimensions)

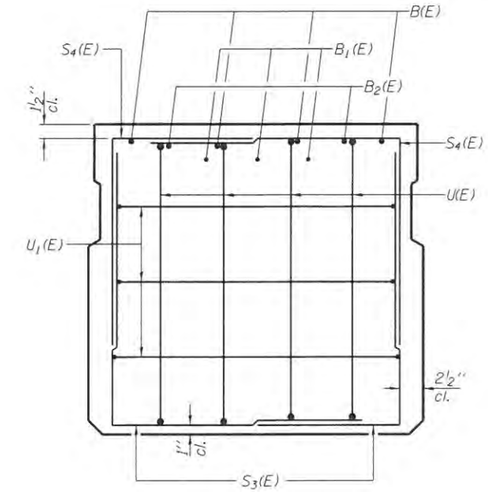

VIEW C-C

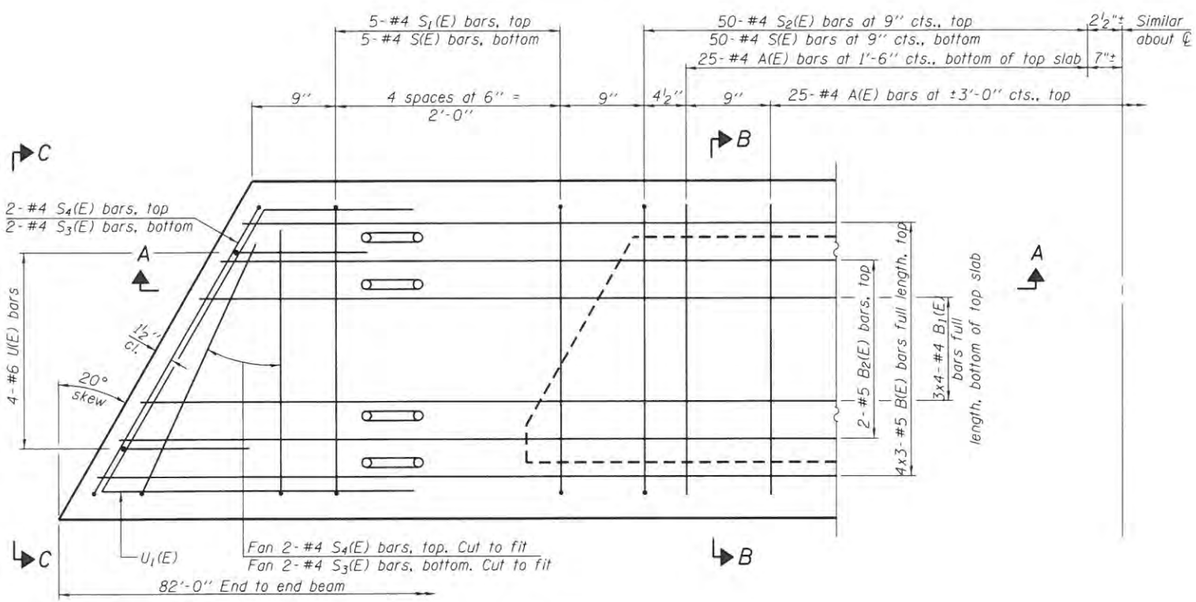

PLAN VIEW

Notes: Spacing of S(E) and S2(E) bars may be adjusted up to 4" in the immediate area of the transverse tie diaphragms to miss the block outs for the transverse ties.

Bars indicated thus, 4x3 - #5 bars etc., indicates 4 lines of bars with 3 lengths per line.

MINIMUM BAR LAP
#4 bar = 1'-11"
#5 bar = 2'-6"

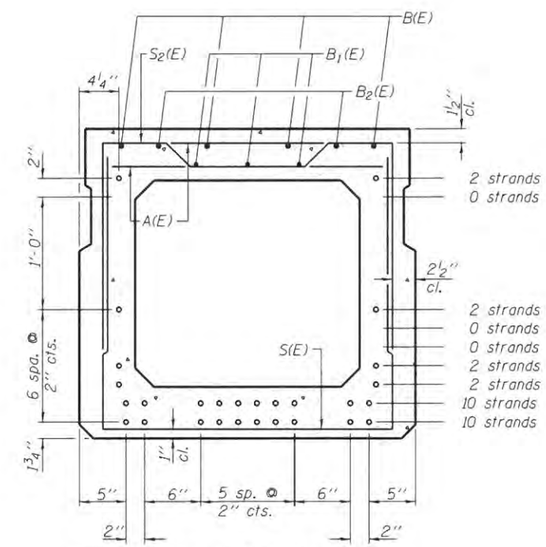

Use: 28-½"Φ strands @ the locations shown.

SECTION B-B
(Showing reinforcement and permissible strand locations)

Note: Place the number of strands specified in each row symmetrically about the centerline of beam in the permissible strand locations shown.

BAR LIST
ONE BEAM ONLY
(For information only)

Bar	No.	Size	Length	Shape
A(E)	75	#4	2'-7"	—
B(E)	12	#5	28'-11"	—
B1(E)	12	#4	21'-11"	—
B2(E)	4	#5	10'-0"	—
S(E)	110	#4	7'-8"	⊔
S1(E)	10	#4	6'-5"	⊓
S2(E)	100	#4	6'-8"	⊓
S3(E)	8	#4	5'-0"	⊔
S4(E)	8	#4	4'-4"	⊔
U(E)	8	#6	5'-0"	⊏
U1(E)	6	#4	6'-1"	⊏

Note: See sheet 4 of 10 for additional details and Bill of Material.

PD-3336-L 6-8-15

FEHR GRAHAM
ENGINEERING & ENVIRONMENTAL
ILLINOIS DESIGN FIRM NO. 184-003525
ILLINOIS
IOWA
WISCONSIN

PLOT DATE:3/30/2017

©2013 FEHR-GRAHAM

AGENCY:
GRUNDY COUNTY HWY. DEPT.
245 NORTH ILLINOIS ROUTE 47
MORRIS, IL 60450

PROJECT:
SECTION 16-00160-00-BR
C.H. V16/LOWERY ROAD
OVER WAUPECAN CREEK

DESIGNED: ARK
CHECKED: MRL
DRAWN: MMY
CHECKED: ARK-MCB

REVISIONS

REV. NO.	DESCRIPTION	DATE

DRAWING:
33" x 36" PPC DECK BEAM
STRUCTURE NUMBER 032-3176
...\bridge\16-097-03-beam.dgn

JOB NUMBER: 16-097

SHEET NUMBER 5 of 14

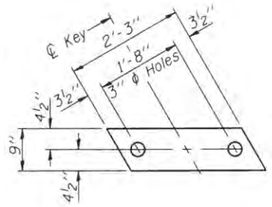

FABRIC BEARING PAD
(Interior)
(16 required)

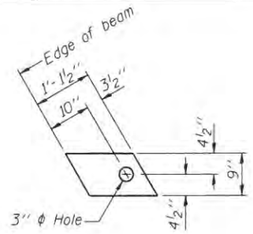

FABRIC BEARING PAD
(Exterior)
(8 required)

FIXED

Notes:
All bearing pads shall be 1" thick.
Omit holes when using expansion bearings.
Expansion bearing pad shall be bonded to the substructure.

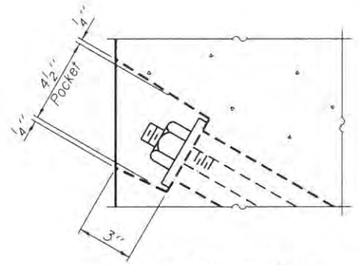

SECTION A-A

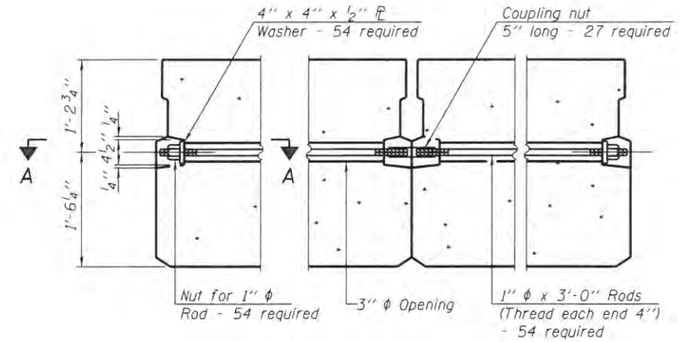

TYPICAL TRANSVERSE TIE ASSEMBLY

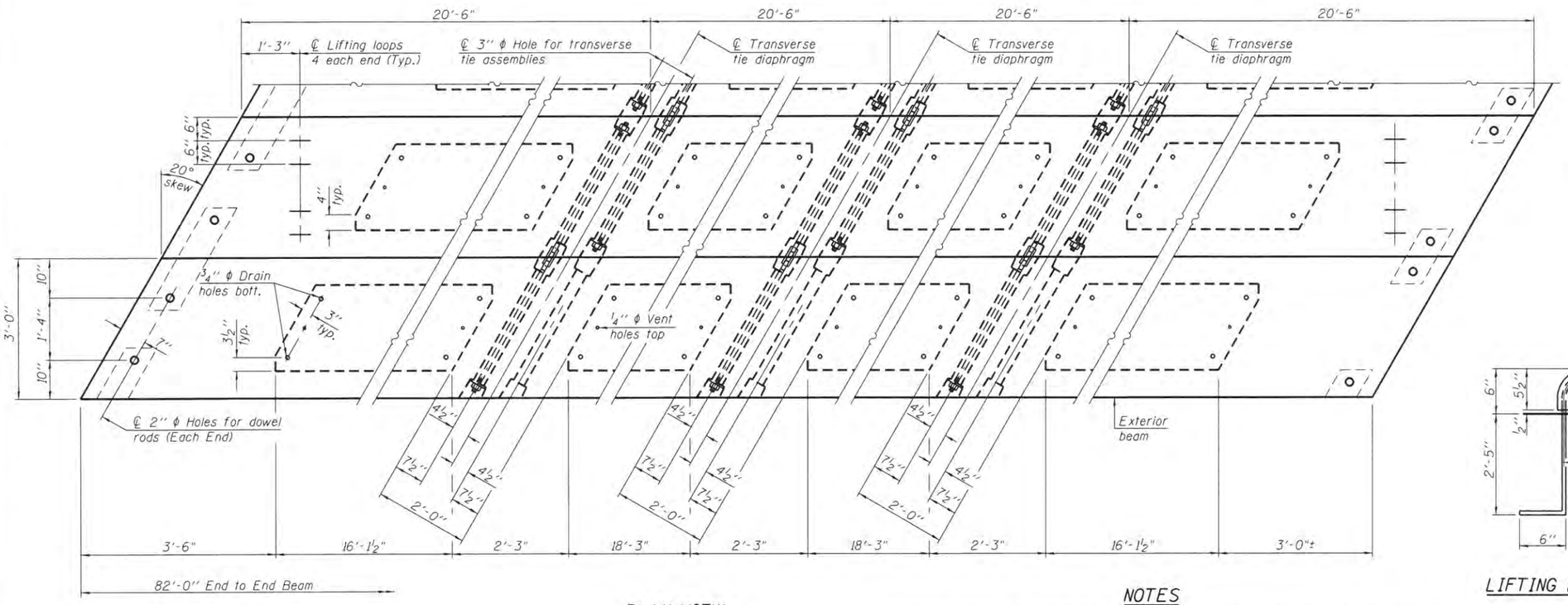

PLAN VIEW

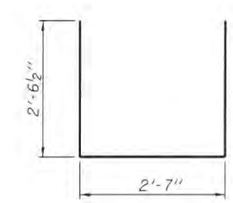

BAR S(E)

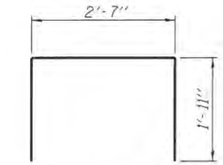

BAR S_1(E)

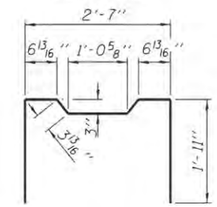

BAR S_2(E)

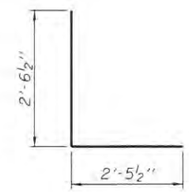

BAR S_3(E)

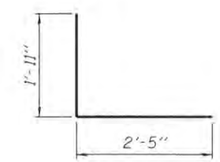

BAR S_4(E)

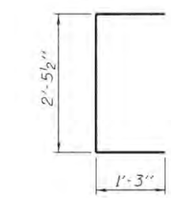

BAR U(E)

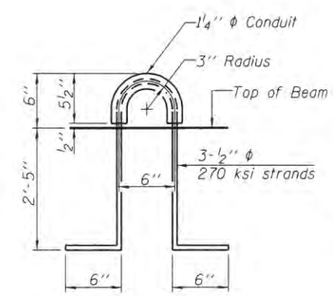

LIFTING LOOP DETAIL

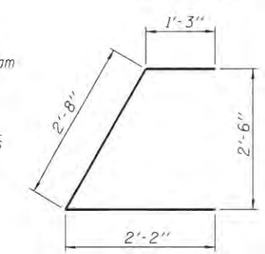

BAR U_1(E)

Note: Connect beams in pairs with the transverse tie configuration shown.

NOTES

Prestressing steel shall be uncoated high strength, low relaxation 7-wire strand, Grade 270. The nominal diameter shall be ½" and the nominal cross-sectional area shall be 0.153 sq. in.

The 1" ϕ rods in the transverse tie assembly shall be tightened to a snug fit and the threads set. Pockets on exterior faces of bridge shall be filled with grout after transverse tie assembly is in place.

Two ⅛" fabric adjusting shims of the dimensions of the exterior bearing pad shall be provided for each bearing pad location. (64 required)

A minimum 2½" ϕ lifting pin shall be used to engage the lifting loops during handling.

Corrosion Inhibitor, per Article 1020.05(b)(10) and 1021.07 of the Standard Specifications, shall be used in the concrete for precast prestressed concrete deck beams.

Compressive strength of prestressed concrete, f'c, shall be 6000 psi.

Compressive strength of prestressed concrete at release, f'ci, shall be 5000 psi.

See Special Provisions for review and distribution of shop drawings.

BILL OF MATERIAL

Precast Prestressed Conc. Deck Bms. (33" depth)	Sq. Ft.	2460
Portland Cement Mortar Fairing Course	Foot	495

Estimated Total Weight (One Beam) = 64,870 Pounds

PD-3336-LD 1-28-16

Sheet 4 of 10

FEHR GRAHAM
ENGINEERING & ENVIRONMENTAL
ILLINOIS DESIGN FIRM NO. 184-003525
ILLINOIS
IOWA
WISCONSIN

PLOT DATE: 3/30/2017

©2013 FEHR-GRAHAM

AGENCY:
GRUNDY COUNTY HWY. DEPT.
245 NORTH ILLINOIS ROUTE 47
MORRIS, IL 60450

PROJECT:
SECTION 16-00160-00-BR
C.H. V16/LOWERY ROAD
OVER WAUPECAN CREEK

DESIGNED: ARK
CHECKED: MRL
DRAWN: MMY
CHECKED: ARK-MCB

REVISIONS

REV. NO.	DESCRIPTION	DATE

DRAWING:
33" x 36" PPC DECK BEAM DETAILS
STRUCTURE NUMBER 032-3176

...\bridge\16-097-04-beam-det.dgn

JOB NUMBER: 16-097

SHEET NUMBER 6 of 14

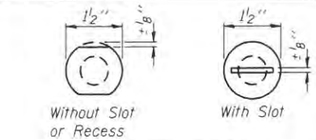

VIEW A-A

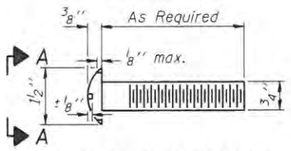

ROUND HEAD BOLT

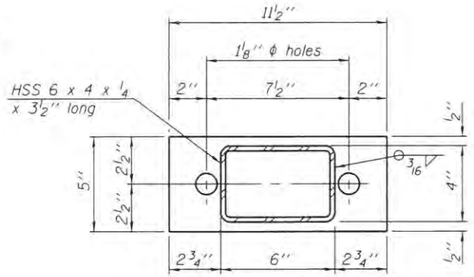

PL ½" x 11½" x 5"

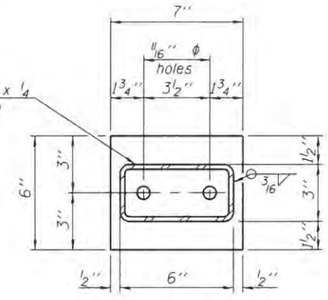

PL ½" x 7" x 6"

Notes:

All field drilled holes shall be coated with an approved zinc rich paint before erection.

All steel rail elements shall be galvanized according to Article 509.05 of the Standard Specifications.

* Threaded areas of nuts or pipes used for anchor devices shall be plugged or blocked off during casting of beam.

** The studs of the anchor devices shall be placed below the top reinforcement bars and the outermost longitudinal reinforcement bar shall be placed directly above the studs of the rail post anchor device.

*** Whenever the lower insert assemblies interfere with strand locations, the #3 bars shall be cut and adjusted in order to allow raising or lowering of the lower inserts. Maximum adjustment not to exceed ½".

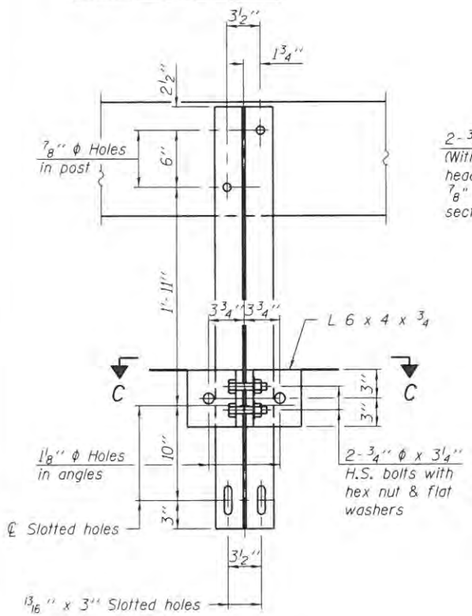

SECTION B-B

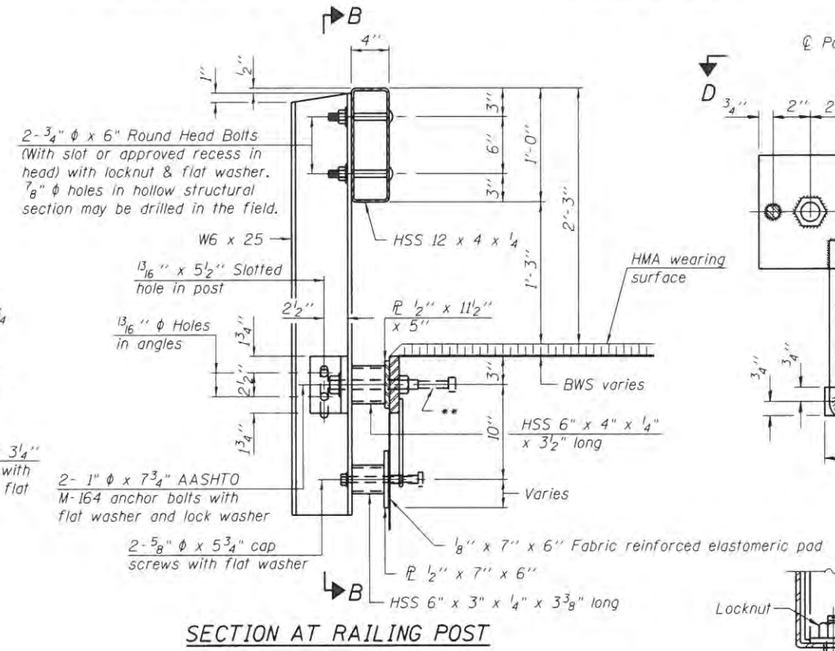

SECTION AT RAILING POST

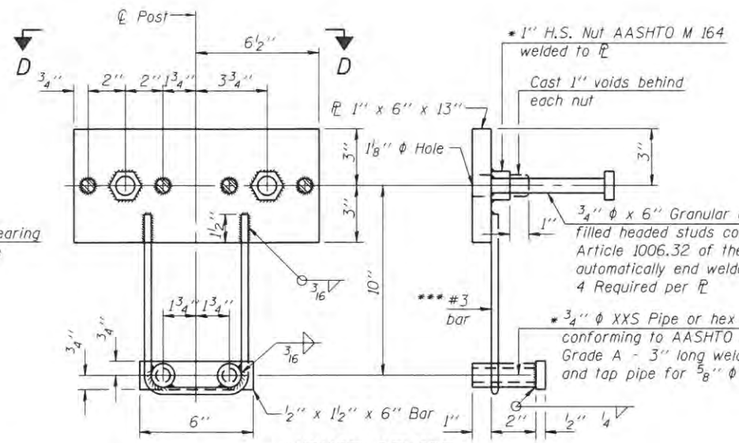

ANCHOR DEVICE

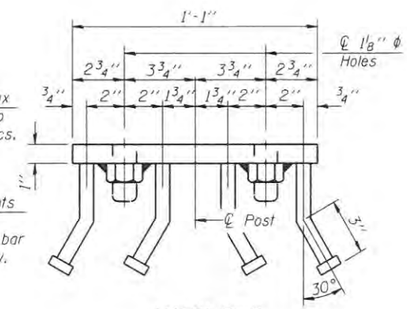

VIEW D-D

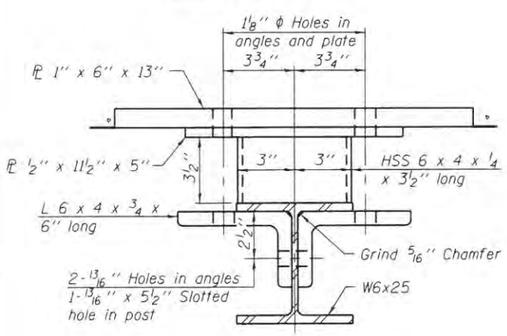

SECTION C-C

(10'-9" Maximum Post Spacing)

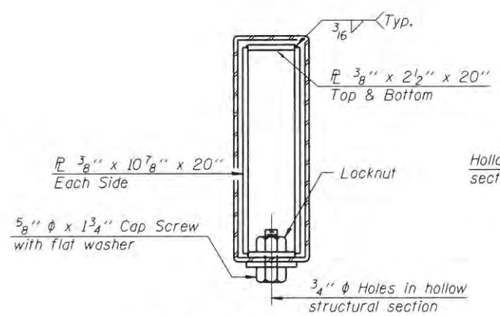

SECTIONS AT RAIL SPLICE

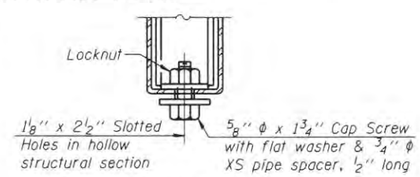

RAIL SPLICE CONNECTION
AT EXPANSION JT.

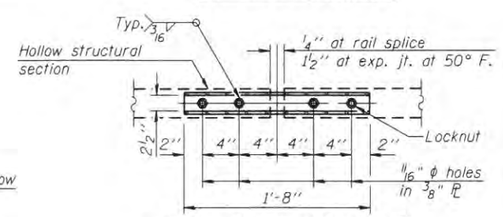

PLAN-BOTT. SPLICE PL
TYPICAL

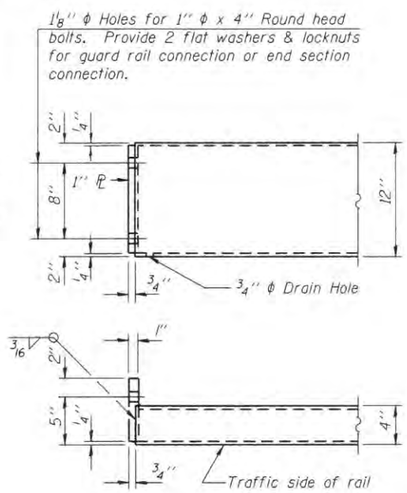

END OF RAIL DETAILS

BILL OF MATERIAL

Item	Unit	Quantity
Steel Railing, Type S-1	Foot	164

See sheet 6 of 10 for Rail Post Spacing and Curled End Section Details.

FEHR GRAHAM
ENGINEERING & ENVIRONMENTAL
ILLINOIS DESIGN FIRM NO. 184-003525
ILLINOIS
IOWA
WISCONSIN

PLOT DATE: 3/30/2017

© 2013 FEHR-GRAHAM

AGENCY:
GRUNDY COUNTY HWY. DEPT.
245 NORTH ILLINOIS ROUTE 47
MORRIS, IL 60450

PROJECT:
SECTION 16-00160-00-BR
C.H. V16/LOWERY ROAD
OVER WAUPECAN CREEK

DESIGNED: ARK
CHECKED: MRL
DRAWN: MMY
CHECKED: ARK-MCB

REVISIONS

REV. NO.	DESCRIPTION	DATE

DRAWING:
STEEL RAILING, TYPE S-1
STRUCTURE NUMBER 032-3176
...\bridge\16-097-05-rail.dgn

JOB NUMBER: 16-097

SHEET NUMBER 7 of 14

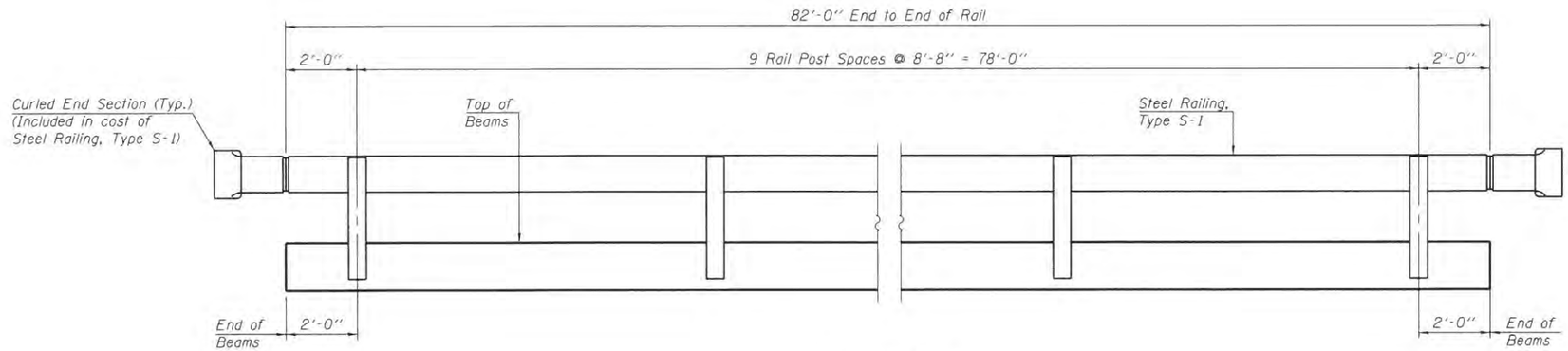

ELEVATION
(Showing Rail Post Spacing)

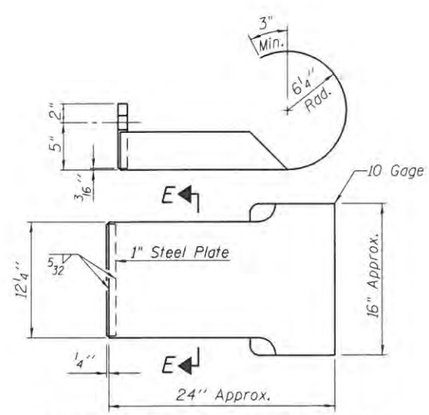

CURLED END SECTION DETAILS
(4 Required)

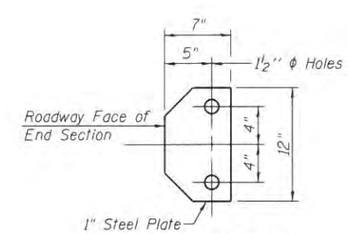

SECTION E-E

See sheet 5 of 10 for Steel Railing Details.

FEHR GRAHAM
ENGINEERING & ENVIRONMENTAL
ILLINOIS DESIGN FIRM NO. 184-003525
ILLINOIS
IOWA
WISCONSIN

PLOT DATE:3/30/2017

©2013 FEHR-GRAHAM

AGENCY:
GRUNDY COUNTY HWY. DEPT.
245 NORTH ILLINOIS ROUTE 47
MORRIS, IL 60450

PROJECT:
SECTION 16-00160-00-BR
C.H. V16/LOWERY ROAD
OVER WAUPECAN CREEK

DESIGNED: ARK
CHECKED: MRL
DRAWN: MMY
CHECKED: ARK-MCB

REVISIONS

REV. NO.	DESCRIPTION	DATE

DRAWING:
STEEL RAILING, TYPE S-1 DETAILS
STRUCTURE NUMBER 032-3176

...\bridge\16-097-06-rail2.dgn

JOB NUMBER:
16-097

SHEET NUMBER
8 of 14

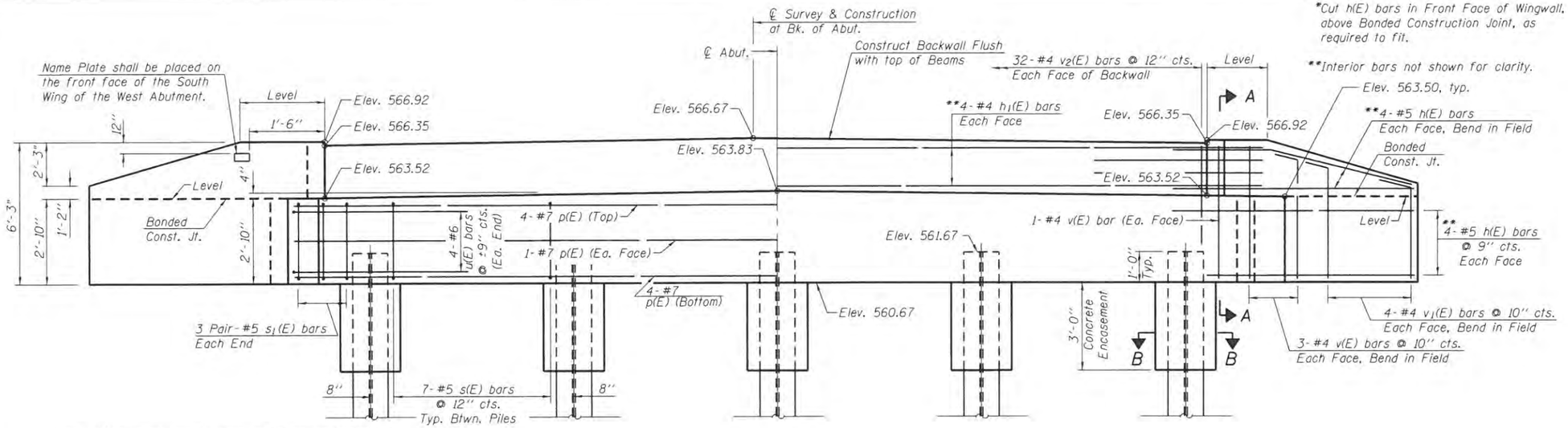

Note: After beams are in place and dowel rods grouted, the backwall and the portions of the wingwalls above the Bonded Construction Joint shall be poured.

ELEVATION

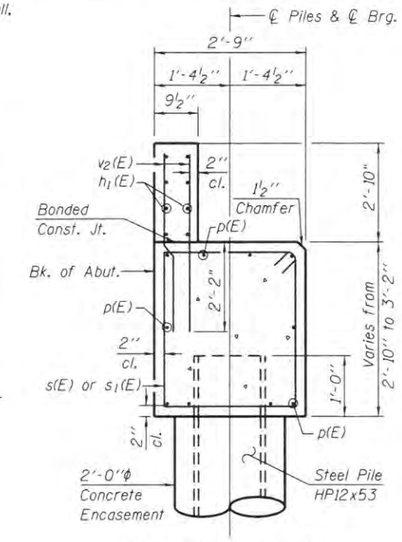

SECTION THRU ABUT.

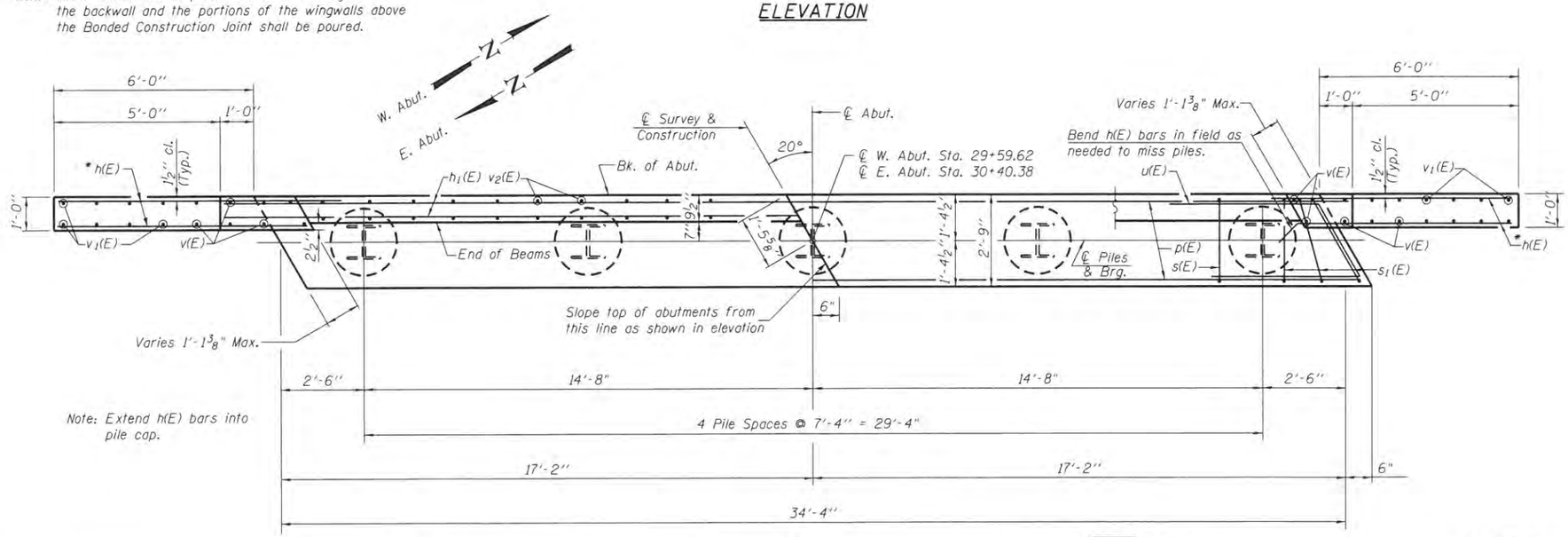

Note: Extend h(E) bars into pile cap.

PLAN

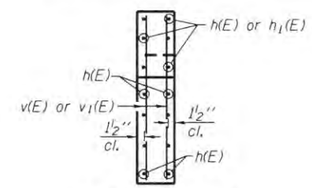

SECTION A-A

TWO ABUTMENTS BILL OF MATERIAL

Bar	No.	Size	Length	Shape
h(E)	64	#5	8'-3"	
h1(E)	16	#4	36'-0"	
p(E)	20	#7	34'-0"	
s(E)	56	#5	10'-9"	
s1(E)	24	#5	7'-4"	
u(E)	16	#6	12'-6"	
v(E)	32	#4	5'-11"	
v1(E)	32	#4	5'-2"	
v2(E)	128	#4	4'-10"	
Concrete Structures			Cu. Yd.	31.6
Reinforcement Bars, Epoxy Coated			Pound	4100
Name Plates			Each	1
Furnishing Steel Piles HP12x53			Foot	242
Test Pile Steel HP12x53			Each	1
Concrete Encasement			Cu. Yd.	3.5
Driving Piles			Foot	242

See Sheet 8 of 10 for Pile Details.

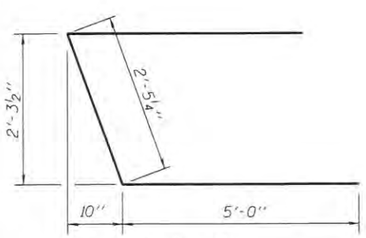

BAR u(E)

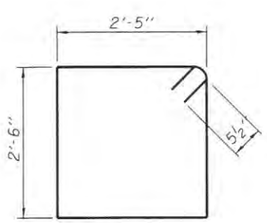

BAR s(E)

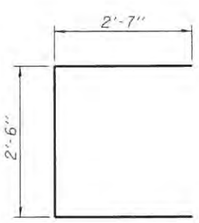

BAR s1(E)

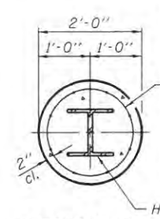

SECTION B-B

Concrete Encasement

Welded wire fabric 6 x 6-W4.0 x W4.0 weighing 58#/100 sq. ft. The cost of Excavation, and Reinforcement is included with Concrete Encasement. Forms for Encasement may be omitted when soil conditions permit. Extend welded wire fabric 1'-0" min. into Abutment Cap.

PILE DATA

Type & Size	Steel HP12x53
No. Req'd.	***10
Nominal Required Bearing	340 k/pile
Factored Resistance Available	187 k/pile
Estimated Length	28 ft. (W. Abut.) 26 ft. (E. Abut.)

*** Includes 1 Test Pile driven in a permanent location at the West Abutment.

Sheet 7 of 10

FEHR GRAHAM
ENGINEERING & ENVIRONMENTAL
ILLINOIS DESIGN FIRM NO. 184-003525
ILLINOIS IOWA WISCONSIN

PLOT DATE:3/30/2017

©2013 FEHR-GRAHAM

AGENCY: GRUNDY COUNTY HWY. DEPT. 245 NORTH ILLINOIS ROUTE 47 MORRIS, IL 60450

PROJECT: SECTION 16-00160-00-BR C.H. V16/LOWERY ROAD OVER WAUPECAN CREEK

DESIGNED: ARK
CHECKED: MRL
DRAWN: MMY
CHECKED: ARK-MCB

REVISIONS

REV. NO.	DESCRIPTION	DATE

DRAWING: ABUTMENT DETAILS STRUCTURE NUMBER 032-3176

...\bridge\16-097-07-abut.dgn

JOB NUMBER: 16-097

SHEET NUMBER 9 of 14

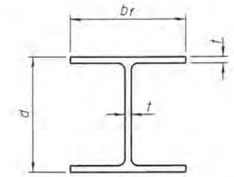

STEEL PILE TABLE

Designation	Depth d	Flange width b_f	Web and Flange thickness t	Encasement diameter A
HP 14x117	14 1/4"	14 7/8"	13/16"	30"
x102	14"	14 3/4"	11/16"	30"
x89	13 7/8"	14 3/4"	5/8"	30"
x73	13 5/8"	14 5/8"	1/2"	30"
HP 12x84	12 1/4"	12 1/4"	11/16"	24"
x74	12 1/8"	12 1/4"	5/8"	24"
x63	12"	12 1/8"	1/2"	24"
x53	11 3/4"	12"	7/16"	24"
HP 10x57	10"	10 1/4"	9/16"	24"
x42	9 3/4"	10 1/8"	7/16"	24"
HP 8x36	8"	8 1/8"	7/16"	18"

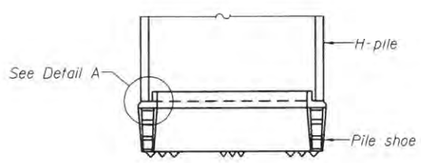

ELEVATION

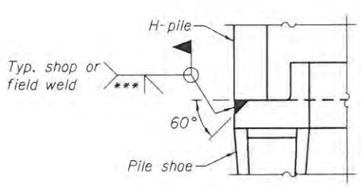

DETAIL A

H-PILE SHOE ATTACHMENT

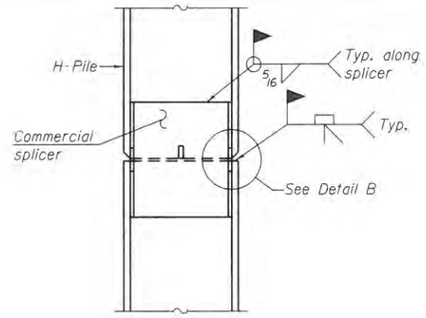

ELEVATION

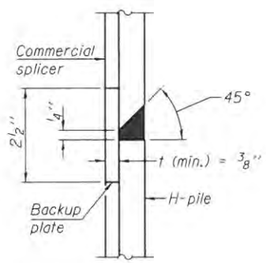

DETAIL "B"

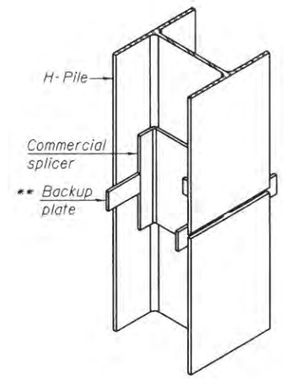

ISOMETRIC VIEW

WELDED COMMERCIAL SPLICE

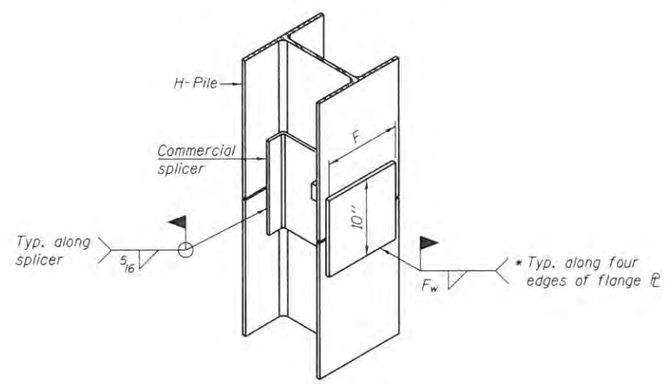

ISOMETRIC VIEW

WELDED COMMERCIAL SPLICE ALTERNATE

* Interrupt welds 1/4" from end of web and/or each flange.

** Remove portions of backup plates that extend outside the flanges.

*** Weld size per pile shoe manufacturer (5/16" min.).

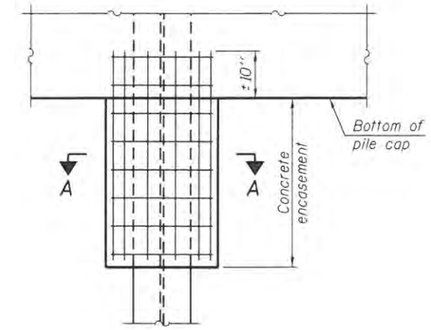

ELEVATION

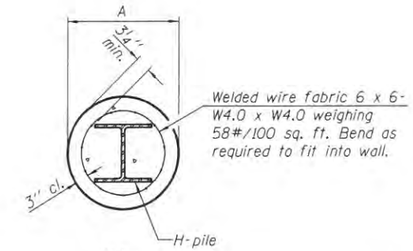

Note:
Forms for encasement may be omitted when soil conditions permit.

SECTION A-A

PILE ENCASEMENT

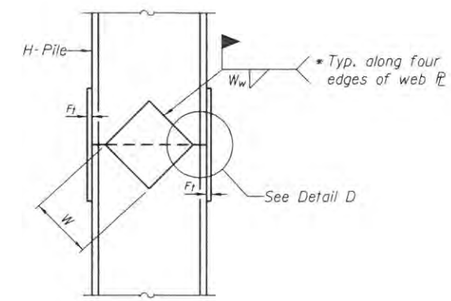

ELEVATION

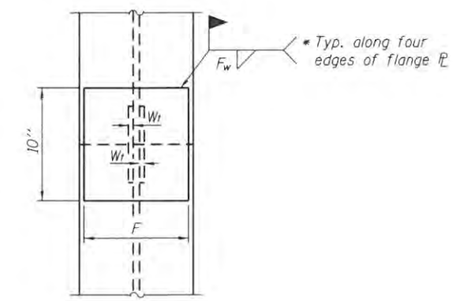

END VIEW

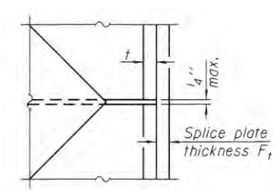

DETAIL D

Designation	F	F_f	F_w	W	W_f	W_w
HP 14x117	12 1/2"	1"	7/8"	7 3/4"	5/8"	1/2"
x102	12 1/2"	7/8"	3/4"	7 3/4"	5/8"	1/2"
x89	12 1/2"	3/4"	11/16"	7 3/4"	5/8"	1/2"
x73	12 1/2"	5/8"	9/16"	7 3/4"	5/8"	1/2"
HP 12x84	10"	7/8"	11/16"	6 1/2"	5/8"	1/2"
x74	10"	7/8"	11/16"	6 1/2"	5/8"	1/2"
x63	10"	5/8"	1/2"	6 1/2"	1/2"	3/8"
x53	10"	5/8"	1/2"	6 1/2"	1/2"	3/8"
HP 10x57	8"	3/4"	9/16"	5 1/4"	1/2"	3/8"
x42	8"	5/8"	9/16"	5 1/4"	1/2"	3/8"
HP 8x36	7"	5/8"	7/16"	4 1/4"	1/2"	3/8"

WELDED PLATE FIELD SPLICE

Note:
The steel H-piles shall be according to AASHTO M270 Grade 50.

F-HP 1-27-12

FEHR GRAHAM
ENGINEERING & ENVIRONMENTAL
ILLINOIS DESIGN FIRM NO. 184-003525
ILLINOIS IOWA WISCONSIN

PLOT DATE: 3/30/2017

© 2013 FEHR-GRAHAM

AGENCY:
GRUNDY COUNTY HWY. DEPT.
245 NORTH ILLINOIS ROUTE 47
MORRIS, IL 60450

PROJECT:
SECTION 16-00160-00-BR
C.H. V16/LOWERY ROAD
OVER WAUPECAN CREEK

DESIGNED: ARK
CHECKED: MRL
DRAWN: MMY
CHECKED: ARK-MCB

REVISIONS

REV. NO.	DESCRIPTION	DATE

DRAWING:
HP PILE DETAILS
STRUCTURE NUMBER 032-3176
...\bridge\16-097-08-piles.dgn

JOB NUMBER: 16-097

SHEET NUMBER: 10 of 14

Midwest Testing Services, Inc.
3705 Progress Blvd.
Peru, IL 61354
Phone: 815-223-6696
Fax: 815-223-6659
e-mail: mts37@comcast.net

BORING LOG

Sheet 1 of 3

Client: Coombe - Bloxdorf, P.C.
Project Name: Section 16-00160-00-BR Lowery Road
Project Site: Grundy County, IL.

Boring No. B-1
Surface Elev. 565.10
Auger Depth 51' Rotary Depth NA
Start Date 09/03/16 Finish Date 09/03/16

Location: Centerline of Roadway
Station 29+55

DRILLED BY: Randy Safranski, Diedrich D-120

(DEPTH) *ELEV 565.10	DESCRIPTION OF MATERIALS	Depth in feet	Sample No.	Sample Type	Qu (TSF)	N Value (Blows)	Bulge / Shear	Moisture (%)	Dry Density (PCF)	REMARKS
564.10	Stiff Black And Brownish Gray Clay (Fill)	1								
563.10		2								
562.10		3	1	SS	1.2	7	B	22		
561.10		4								
560.10		5	2	SS	1.4	8	B	20		
559.10		6								
558.10		7								
557.10		8	3	SS	1.4	10	B	18		
556.10		9								
555.10		10	4	SS	1.2	8	S	16		
554.10	Medium Gray Fine To Coarse Sand	11								
553.10		12								
552.10		13	5	SS	---	18	---	---		
551.10		14								
550.10	Dense Gray Silt	15								
549.10		16	6	SS	---	39	---	---		
548.10	Medium Gray Silt	17								
547.10		18	7	SS	---	20	---	---		
546.10	Dense Brownish Black Organic Silt	19								
545.10		20	8	SS	---	36	---	39		

Groundwater Data: Static water level after auger removal - Elevation 553.5
Comments:

Midwest Testing Services, Inc.
3705 Progress Blvd.
Peru, IL 61354
Phone: 815-223-6696
Fax: 815-223-6659
e-mail: mts37@comcast.net

BORING LOG

Sheet 2 of 3

Client: Coombe - Bloxdorf, P.C.
Project Name: Section 16-00160-00-BR Lowery Road
Project Site: Grundy County, IL.

Boring No. B-1
Surface Elev. 565.10
Auger Depth 51' Rotary Depth NA
Start Date 09/03/16 Finish Date 09/03/16

Location: Centerline of Roadway
Station 29+55

DRILLED BY: Randy Safranski, Diedrich D-120

(DEPTH) ELEV 544.10	DESCRIPTION OF MATERIALS	Depth in feet	Sample No.	Sample Type	Qu (TSF)	N Value (Blows)	Bulge / Shear	Moisture (%)	Dry Density (PCF)	REMARKS
543.10		22								
542.10	Medium Gray Clay	23	9	SS	--	28	--	14		
541.10		24								
540.10		25	10	SS	--	29	--	14		
539.10		26								
538.10	Dense Gray Weathered Shale	27								
537.10		28	11	SS	--	33	--	12		
536.10		29								
535.10		30	12	SS	--	47	--	11		
534.10		31								
533.10		32								
532.10		33	13	SS	--	39	--	--		
531.10	Very Dense Black Coal	34								
530.10		35								
529.10		36	14	SS	--	64	--	--		
528.10	Dense Gray Clay	37								
527.10		38								
526.10		39								
525.10		40								
524.10		41	15	SS	--	32	--	17		

Groundwater Data: Static water level after auger removal - Elevation 553.5
Comments:

Midwest Testing Services, Inc.
3705 Progress Blvd.
Peru, IL 61354
Phone: 815-223-6696
Fax: 815-223-6659
e-mail: mts37@comcast.net

BORING LOG

Sheet 3 of 3

Client: Coombe - Bloxdorf, P.C.
Project Name: Section 16-00160-00-BR Lowery Road
Project Site: Grundy County, IL.

Boring No. B-1
Surface Elev. 565.10
Auger Depth 51' Rotary Depth NA
Start Date 09/03/16 Finish Date 09/03/16

Location: Centerline of Roadway
Station 29+55

DRILLED BY: Randy Safranski, Diedrich D-120

(DEPTH) ELEV 523.10	DESCRIPTION OF MATERIALS	Depth in feet	Sample No.	Sample Type	Qu (TSF)	N Value (Blows)	Bulge / Shear	Moisture (%)	Dry Density (PCF)	REMARKS
522.10		43								
521.10		44								
520.10	Very Dense Gray Sandy Shale	45	16	SS	—	100 4"	---	15		
519.10		46								
518.10		47								
517.10		48								
516.10		49								
515.10		50	17	SS	---	100 2"	---	15		
514.10	Boring Terminated	51								
513.10		52								
512.10		53								
511.10		54								
510.10		55								
509.10		56								
508.10		57								
507.10		58								
506.10		59								
505.10		60								
504.10		61								
503.10		62								

Groundwater Data: Static water level after auger removal - Elevation 553.5
Comments:

FEHR GRAHAM
ENGINEERING & ENVIRONMENTAL
ILLINOIS DESIGN FIRM NO. 184-003525
ILLINOIS
IOWA
WISCONSIN
PLOT DATE:3/30/2017
© 2013 FEHR-GRAHAM

AGENCY:
GRUNDY COUNTY HWY. DEPT.
245 NORTH ILLINOIS ROUTE 47
MORRIS, IL 60450

PROJECT:
SECTION 16-00160-00-BR
C.H. V16/LOWERY ROAD
OVER WAUPECAN CREEK

DESIGNED: ARK
CHECKED: MRL
DRAWN: MMY
CHECKED: ARK-MCB

REVISIONS

REV. NO.	DESCRIPTION	DATE

DRAWING:
SOIL BORING LOGS
STRUCTURE NUMBER 032-3176
...\bridge\16-097-09-boringsl.dgn

JOB NUMBER: 16-097
SHEET NUMBER: 11 of 14

BORING LOG

Midwest Testing Services, Inc.
3705 Progress Blvd.
Peru, IL 61354

Phone: 815-223-6696
Fax: 815-223-6659
e-mail: mts37@comcast.net

Sheet 1 of 3

Client: Coombe - Bloxdorf, P.C.
Project Name: Section 16-00160-00-BR Lowery Road
Project Site: Grundy County, IL.

Boring No. B-2
Surface Elev. 564.90
Auger Depth 51' Rotary Depth NA
Start Date 09/03/16 Finish Date 09/03/16

Location: Centerline of Roadway
Station 30+45

DRILLED BY: Randy Safranski, Diedrich D-120

(DEPTH) ELEV. 564.90	DESCRIPTION OF MATERIALS	Graphic Log	Depth in feet	Sample No.	Sample Type	Qu (TSF)	N Value (Blows)	Bulge / Shear	Moisture (%)	Dry Density (PCF)	REMARKS
563.90			1								
562.90			2								
561.90	Very Stiff Brownish Gray Clay Mixed With Crushed Stone (Fill)		3	1	SS	2.2	18	S	12		
560.90			4								
559.90			5	2	SS	2.0	12	S	14		
558.90			6								
557.90			7								
556.90			8	3	SS	1.5	8	B	18		
555.90	Stiff Brownish Gray Clay (Fill)		9								
554.90			10								
553.90			11	4	SS	1.4	8	S	14		
552.90			12								
551.90			13	5	SS	---	31	---	---		
550.90	Dense Gray Silt		14								
549.90			15								
548.90			16	6	SS	---	37	---	---		
547.90			17								
546.90	Medium Gray Silt		18	7	SS	---	18	---	---		
545.90			19								
544.90			20	8	SS	---	21	---	---		

Groundwater Data: Static water level after auger removal - Elevation 553.5
Comments:

BORING LOG

Midwest Testing Services, Inc.
3705 Progress Blvd.
Peru, IL 61354

Phone: 815-223-6696
Fax: 815-223-6659
e-mail: mts37@comcast.net

Sheet 2 of 3

Client: Coombe - Bloxdorf, P.C.
Project Name: Section 16-00160-00-BR Lowery Road
Project Site: Grundy County, IL.

Boring No. B-2
Surface Elev. 564.90
Auger Depth 51' Rotary Depth NA
Start Date 09/03/16 Finish Date 09/03/16

Location: Centerline of Roadway
Station 30+45

DRILLED BY: Randy Safranski, Diedrich D-120

(DEPTH) ELEV. 543.90	DESCRIPTION OF MATERIALS	Graphic Log	Depth in feet	Sample No.	Sample Type	Qu (TSF)	N Value (Blows)	Bulge / Shear	Moisture (%)	Dry Density (PCF)	REMARKS
542.90			22								
541.90	Medium Gray Clay		23	9	SS	---	25	---	15		
540.90			24								
539.90			25								
538.90			26	10	SS	---	48	---	12		
537.90	Dense Gray Weathered Shale		27								
536.90			28	11	SS	---	41	---	13		
535.90			29								
534.90			30								
533.90			31	12	SS	---	76	---	---		
532.90	Very Dense Black Coal		32								
531.90			33	13	SS	---	65	---	---		
530.90			34								
529.90	Very Dense Gray Weathered Sandy Shale		35								
528.90			36	14	SS	---	55	---	12		
527.90			37								
526.90			38								
525.90	Very Dense Gray Sandy Shale		39								
524.90			40	15	SS	---	100/3"	---	---		
523.90			41								

Groundwater Data: Static water level after auger removal - Elevation 553.5
Comments:

BORING LOG

Midwest Testing Services, Inc.
3705 Progress Blvd.
Peru, IL 61354

Phone: 815-223-6696
Fax: 815-223-6659
e-mail: mts37@comcast.net

Sheet 3 of 3

Client: Coombe - Bloxdorf, P.C.
Project Name: Section 16-00160-00-BR Lowery Road
Project Site: Grundy County, IL.

Boring No. B-2
Surface Elev. 564.90
Auger Depth 51' Rotary Depth NA
Start Date 09/03/16 Finish Date 09/03/16

Location: Centerline of Roadway
Station 30+45

DRILLED BY: Randy Safranski, Diedrich D-120

(DEPTH) ELEV. 522.90	DESCRIPTION OF MATERIALS	Graphic Log	Depth in feet	Sample No.	Sample Type	Qu (TSF)	N Value (Blows)	Bulge / Shear	Moisture (%)	Dry Density (PCF)	REMARKS
521.90			43								
520.90			44								
519.90			45								
518.90	Very Dense Gray Sandy Shale		46	16	SS	---	100/3"	---	---		
517.90			47								
516.90			48								
515.90			49								
514.90			50								
513.90			51	17	SS	---	100/3"	---	---		
512.90	Boring Terminated		52								
511.90			53								
510.90			54								
509.90			55								
508.90			56								
507.90			57								
506.90			58								
505.90			59								
504.90			60								
503.90			61								
502.90			62								

Groundwater Data: Static water level after auger removal - Elevation 553.5
Comments:

FEHR GRAHAM
ENGINEERING & ENVIRONMENTAL
ILLINOIS DESIGN FIRM NO. 184-003525
ILLINOIS
IOWA
WISCONSIN

PLOT DATE:3/30/2017

©2013 FEHR-GRAHAM

AGENCY:
GRUNDY COUNTY HWY. DEPT.
245 NORTH ILLINOIS ROUTE 47
MORRIS, IL 60450

PROJECT:
SECTION 16-00160-00-BR
C.H. V16/LOWERY ROAD
OVER WAUPECAN CREEK

DESIGNED: ARK
CHECKED: MRL
DRAWN: MMY
CHECKED: ARK-MCB

REVISIONS

REV. NO.	DESCRIPTION	DATE

DRAWING:
SOIL BORING LOGS
STRUCTURE NUMBER 032-3176

...\bridge\16-097-10-borings2.dgn

JOB NUMBER: 16-097

SHEET NUMBER 12 of 14

STA 29+58.16 C=0 F=0 AHEAD
BK OF ABUTMENT C=0 F=105 BACK

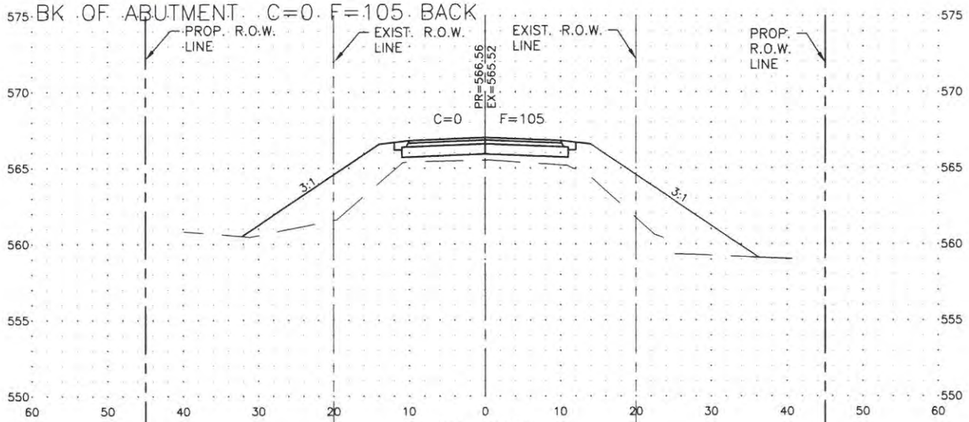

STA 29+50

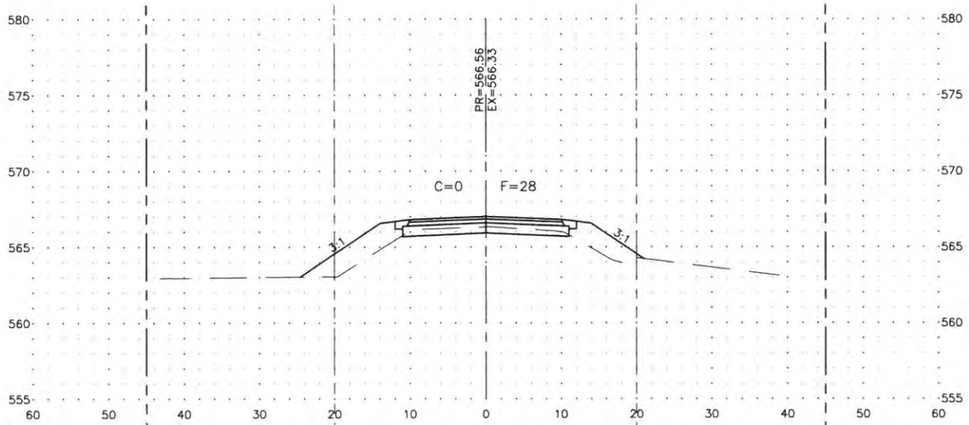

STA 29+00

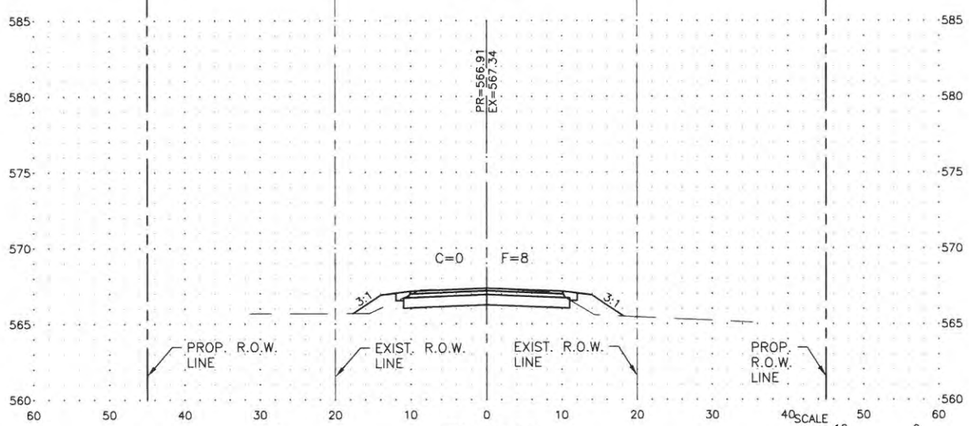

STA 28+00

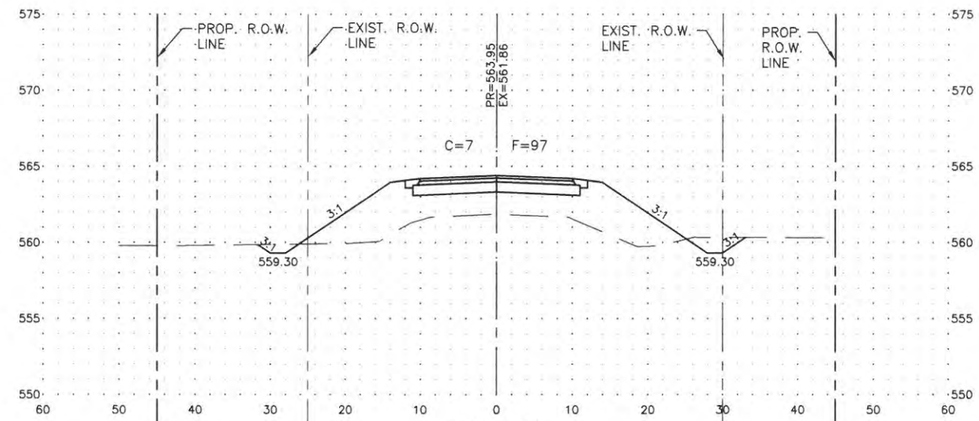

STA 32+00

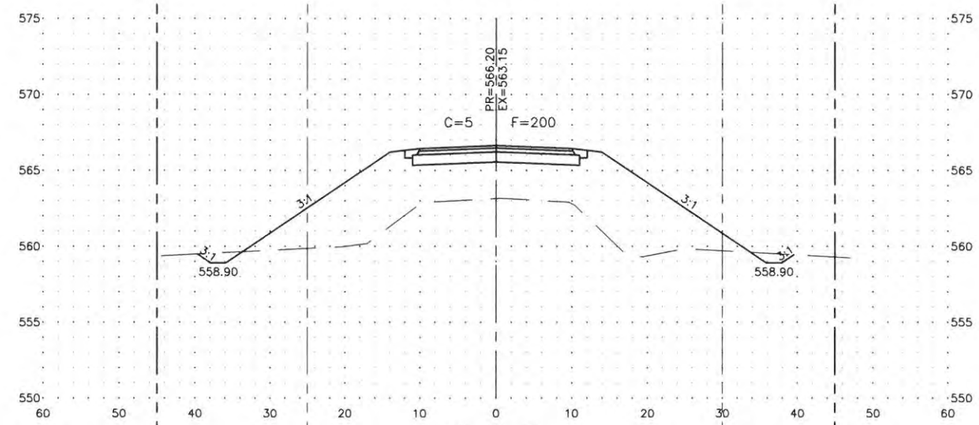

STA 31+00

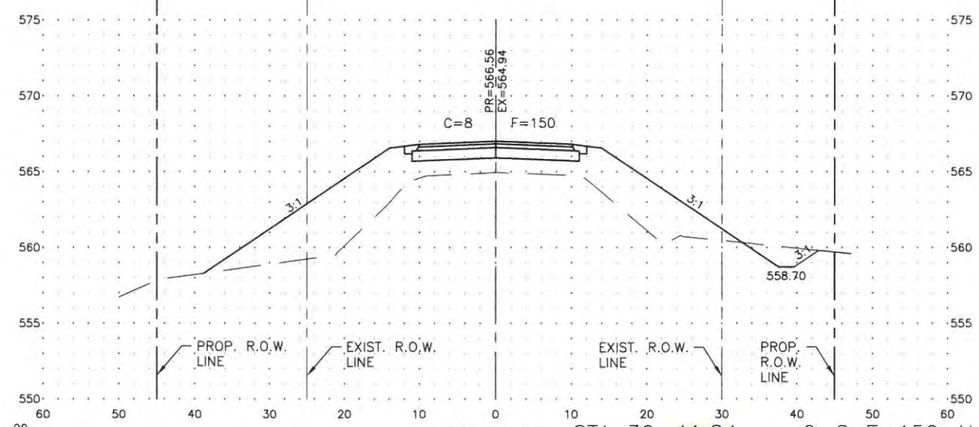

STA 30+50

SCALE
HOR 10 0 10 20
VER 5 0 5 10

STA 30+41.84 C=8 F=150 AHEAD
BK OF ABUTMENT C=0 F=0 BACK

PRELIMINARY

FEHR GRAHAM
ENGINEERING & ENVIRONMENTAL
ILLINOIS DESIGN FIRM NO. 184-003525

ILLINOIS
IOWA
WISCONSIN

OWNER/DEVELOPER:
GRUNDY COUNTY

PROJECT AND LOCATION:
SECTION 16-00160-00-BR
C.H. V16/LOWERY RD OVER
WAUPECAN CREEK

DRAWN BY: CFC
APPROVED BY: MRL
DATE: 7-19-16
SCALE: AS NOTED

REVISIONS

REV. NO.	DESCRIPTION	DATE

DRAWING:
CROSS SECTION SHEET - 1

G:\C3D\16\16-097\16-097-design.dwg, Cross Section Sheet - 1

JOB NUMBER:
16-097

SHEET NUMBER:
13 of 14

PLOT DATE: 3/24/17

© 2016 FEHR GRAHAM

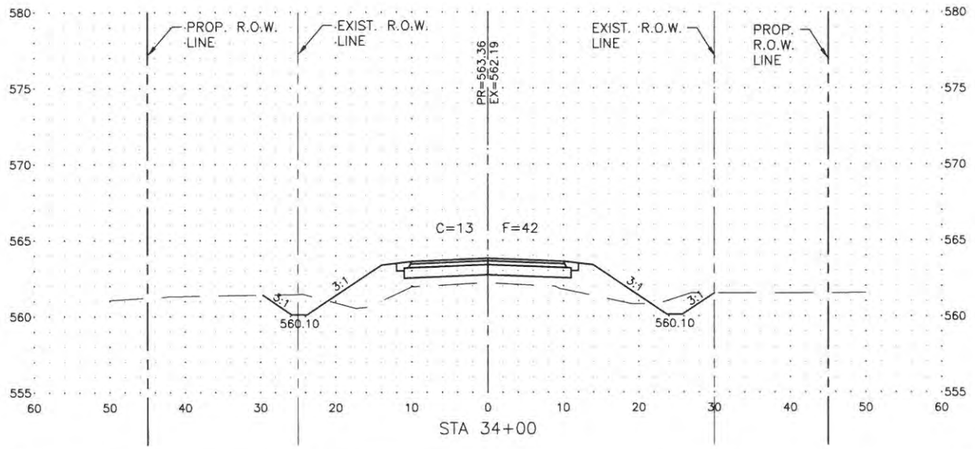

STA 34+00

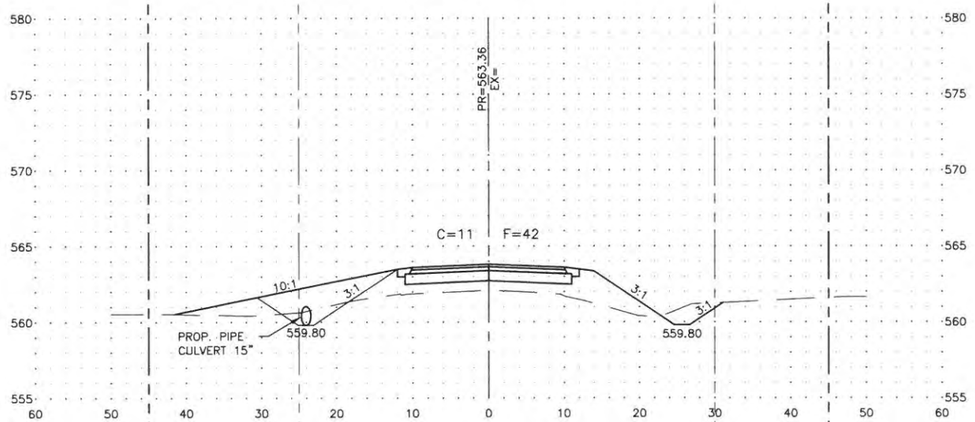

STA 33+25

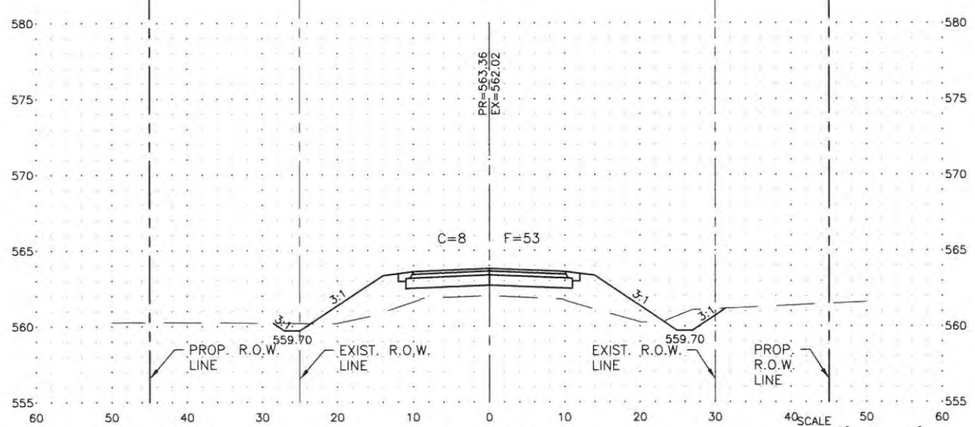

STA 33+00

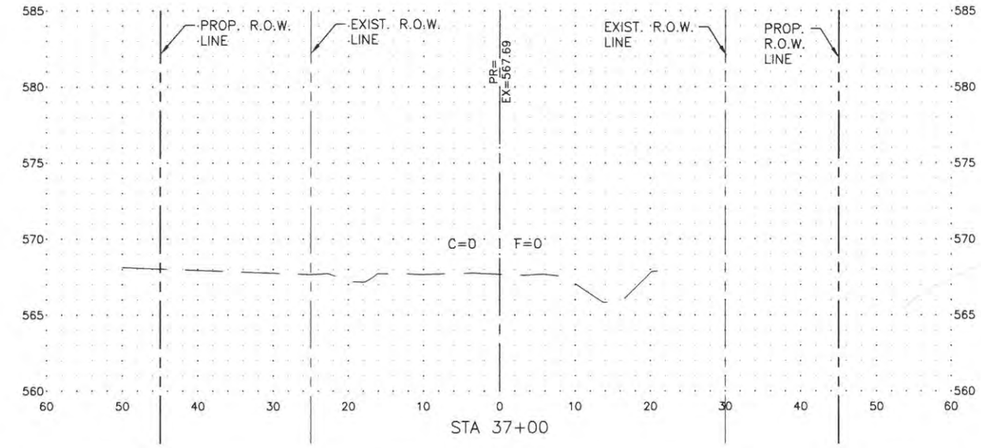

STA 37+00

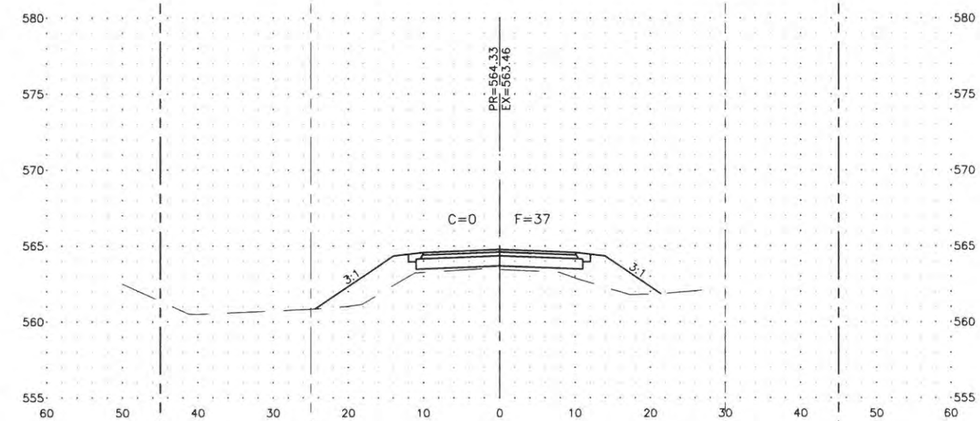

STA 36+00

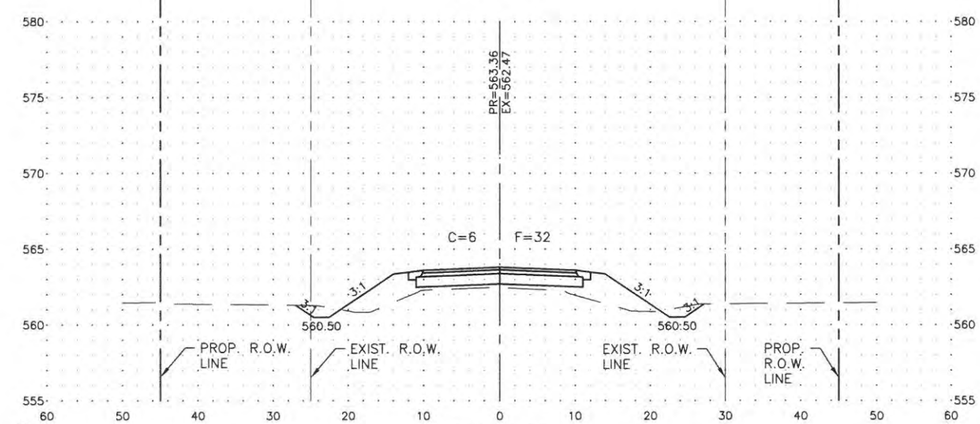

STA 35+00

SCALE
HOR 10 0 10 20
VER 5 0 5 10

PRELIMINARY

FEHR GRAHAM
ENGINEERING & ENVIRONMENTAL
ILLINOIS DESIGN FIRM NO. 184-003525

ILLINOIS
IOWA
WISCONSIN

PLOT DATE: 3/24/17

© 2016 FEHR GRAHAM

OWNER/DEVELOPER:
GRUNDY COUNTY

PROJECT AND LOCATION:
SECTION 16-00160-00-BR
C.H. V16/LOWERY RD OVER
WAUPECAN CREEK

DRAWN BY: CFC
APPROVED BY: MRL
DATE: 7-19-16
SCALE: AS NOTED

REVISIONS

REV. NO.	DESCRIPTION	DATE

DRAWING:
CROSS SECTION SHEET - 2

G:\C3D\16\16-097\16-097-design.dwg, Cross Section Sheet - 2

JOB NUMBER:
16-097

SHEET NUMBER:
14 of 14